HERTZ STRESS VARIATION OF A RZEPPA JOINT DUE TO MANUFACTURING INACCURACY

Jesse Song
Delphi Saginaw Steering Systems
3900 Holland Rd., Saginaw, MI 48601
Tel: (517)757-9122, Fax: (517)757-3400
E-mail: jesse.song@delphiauto.com

ABSTRACT

As a Rzeppa joint is manufactured, the dimension variation of relative groove position makes a significant difference on the ball-groove Hertz stress. This difference results in the durability variation of the joints. An ideal inner race and an inner race with groove spacing error are simulated with an ADAMS model. The angular spacing error of the inner race grooves results in uneven Hertz stress distribution among six outer race grooves. Two of them are exposed to extra wear. A durability test is conducted with the inner race of spacing error. The simulation is well supported by the test result. Further simulation shows the ball-groove Hertz stress is also affected by the relative position of the outer race groove center to the outer race sphere center. And the Hertz stress is more sensitive to the off-axis error than to the along-axis error.

INTRODUCTION

As the parts of a Rzeppa Constant Velocity Joint are manufactured, dimension variations may require overdesign of certain components. The need to balance the manufacturing accuracy and the product robustness sparked the analytical approach in this paper.

The Rzeppa joint is required to be durable and able to transmit torque smoothly through all joint angles. The joint achieves constant velocity by constraining the 6 balls to lay in a plane, which bisects the angle between the O.R. (Outer Race) stem and the I.R. (Inner Race) shaft, known as the half-joint-angle plane. As shown in Figure 1, the ball position is determined by the cross point of the ball center traces along the O.R. groove and the I.R. groove. The arcuate ball center traces of outer race and inner race are centered at O1 and O2 respectively. Point O1 is called the outer race groove center and Point O2 the inner race groove center. A cage is also put into the joint to assure the ball motion and the half-joint-angle plane by constraining the 6 balls in the 6 cage windows. The convex cage OD (Outer Diameter) sphere is confined by the concave O.R. sphere. The convex I.R. sphere is also confined by the concave cage ID (Inner Diameter) sphere. The above four sphere centers theoretically coincide at point O which is called the joint center.

Ideally all inner race grooves are equally spaced in the circunferencial direction. Every two neighboring inner race grooves have a 60° angular distance, as in Figure 2(a). Due to the material deformation and the manufacturing inaccuracy, this angular distance may vary. The actual angular distance among the inner race grooves of an inspected part is shown in Figure 2(b). This inaccuracy of groove angular spacing interrupts the harmony of load distribution among the six pairs of ball and groove. Some balls have press fit in the coupled outer race groove and inner race groove. Some have loose fit. The press fitted grooves may be exposed to an extra high contact stress that is described as the Hertz stress. In addition, the wrong position of the outer race groove center (Point O1 in Figure 1) may also cause the unwanted Hertz stress distribution among the grooves.

The life of the groove has a relation to the Hertz stress. Usually, a higher Hertz stress results in spalling or wearing marks in a shorter running time. The present study simulates the Hertz stress distribution as a consequence of positioning the grooves inaccurately and furthermore predicts which grooves are vulnerable with respect to durability.

THE ADAMS MODEL OF A RZEPPA JOINT

An ADAMS model is built to simulate the motion and the interactive forces of every part in a Rzeppa joint. The parts are kinematically treated as solid bodies. The contact forces are simulated with spring-damper forces. The material deformation is calculated with linear or nonlinear stiffness. Therefore, the interactive forces among the parts are determined with their relative positions and their relative velocities. These forces basically can be summarized as below.

(1) Contact force between a ball and a groove: It is simulated with an ADAMS IMPACT FUNCTION in a subroutine. The nonlinear stiffness is calculated with the Hertz Theory.
(2) Contact force between a ball and a cage window: An ADAMS BUSHING FUNCTION is used. The cage stiffness is obtained from a Finite Element Model.
(3) Contact force among the outer race, the cage and the inner race: ADAMS SINGLE COMPONENT FORCES are formed.
(4) Friction force: A constant coefficient of friction is applied. The coefficient is measured under working conditions.

In the model, the outer race stem is constrained by a revolute joint. It can also be angulated to any angle. A rotation is applied on the outer race stem and a torque is applied on the inner race axle to resist the rotation. To obtain comparable results, a 200 [rpm] rotation is chosen for all the analysis in this paper.

SIMULATION AND TEST UPON THE ANGULAR SPACING OF INNER RACE GROOVES

The simulation is performed at 6° joint angle and 300 N-m torque load. In this analysis, the spacing of the outer race grooves is always treated as ideal.

Two Inner races are respectively used in the ADAMS model of Rzeppa joint. One has the ideal groove spacing, shown in Figure 2(a). The other has some angular spacing error among the six grooves as inspected. The angular spacing error is shown in Figure 2(b).

Since the Hertz stress distribution of the inner race grooves has the same trend with that of the outer race grooves, only the latter is chosen to be discussed here.

The Hertz stress curves of the joint using the ideal inner race are drawn with the dotted lines in Figure 3. The Hertz stress curve of each groove has the same shape but with a 60° phase angle to its neighbor grooves, when the ideal joint completes one revolution. Each groove reaches its maximum Hertz stress at a different moment, but the maximum value is the same with every groove. Hence all grooves theoretically have the same durability.

As for the joint using the inspected inner race, the outer race grooves do not contribute equivalently to carrying the load due to the angular spacing error of the inner race grooves. Described with the solid lines in Figure 3, the outer race groove Hertz stress of this joint is certainly different from the dotted lines of the ideal joint. The outer race groove #2 and #5 of this joint have much higher Hertz stress curves than the rest of the grooves, especially the outer race groove #3 and #6. This uneven Hertz stress distribution among the six outer race grooves will result in early wear-out for groove #2 and #5, while the rest of the grooves are still in good shape.

In order to verify this analytical conclusion, a durability test is conducted with the joint using the inspected inner race. The durability test is under the same condition as the simulation. After a certain running time, all parts are taken apart and inspected. The visual report is shown in Figure 4. The ideally spaced inner race grooves are shown as a reference with the note of "PERFECT SPACING". The position of the balls represents the effect of the spacing error. From the test report we know that wear marks and spalling occur on outer race groove #2 and #5 respectively. The rest of the grooves do not show any sign of wear. The test result is in agreement with the analytical prediction.

SIMULATION UPON THE SPACING OF OUTER RACE GROOVE CENTER

The center of all outer race grooves (Point O1) is supposed to be on the outer race axis and offset a certain distance from the outer race sphere center (Point O), as in Figure 1. In the realistic forming process, the outer race

groove center Point O1 is often off the axis, called off-axis error. Or it can be on the axis but away from where it should be, called along-axis error. Both errors increase the peak value of the groove Hertz stress.

Under the common condition of 0° joint angle, 2300 N-m torque load and an ideal inner race, simulations are run with various off-axis errors and along-axis errors. For each case, and in each complete revolution, the maximum Hertz stress among six outer race grooves is picked up. The increase of this maximum Hertz stress due to the off-axis error and the along-axis error is respectively plotted in Figure 5. The curves show that the outer race groove Hertz stress is much more sensitive to the off-axis error than to the along-axis error. The same amount of an off-axis error will result in a bigger increase of the Hertz stress than an along-axis error.

CONCLUSION

For an ideal Rzeppa Constant Velocity Joint, every groove carries equivalent load in each revolution so that the Hertz stress is evenly distributed among all grooves. The angular spacing error of the inner race grooves results in uneven Hertz stress distribution among the six outer race grooves. Some grooves are exposed to extra high wear, while some other grooves carry far less load than they should, as the simulation shows.

This analytical prediction is well supported by a durability test. In the test, the two outer race grooves with high Hertz stress curves have a wear mark or spalling area, while the rest of the grooves are in good shape.

Another simulation is run to investigate the effect of the spacing error of the outer race groove center. Both the off-axis error and the along-axis error of the outer race groove center increase the maximum Hertz stress value among the six outer race grooves, but the Hertz Stress is much more sensitive to the off-axis error than to the along-axis error.

REFERENCES

1. F. Schmelz, C.Seherr-Thoss and E. Aucktor. Universal joints and driveshafts----Analysis, design, applications. Translated by S. J. Hill and J. A. Tipper. Springer-Verlag 1992.
2. D. A. Hills, D. Nowell and A. Sackfield. Mechanics of elastic contacts. Butterworth-Heinemann 1993.
3. Mechanical Dynamics,Inc. ADAMS/Solver reference manual, 1994.

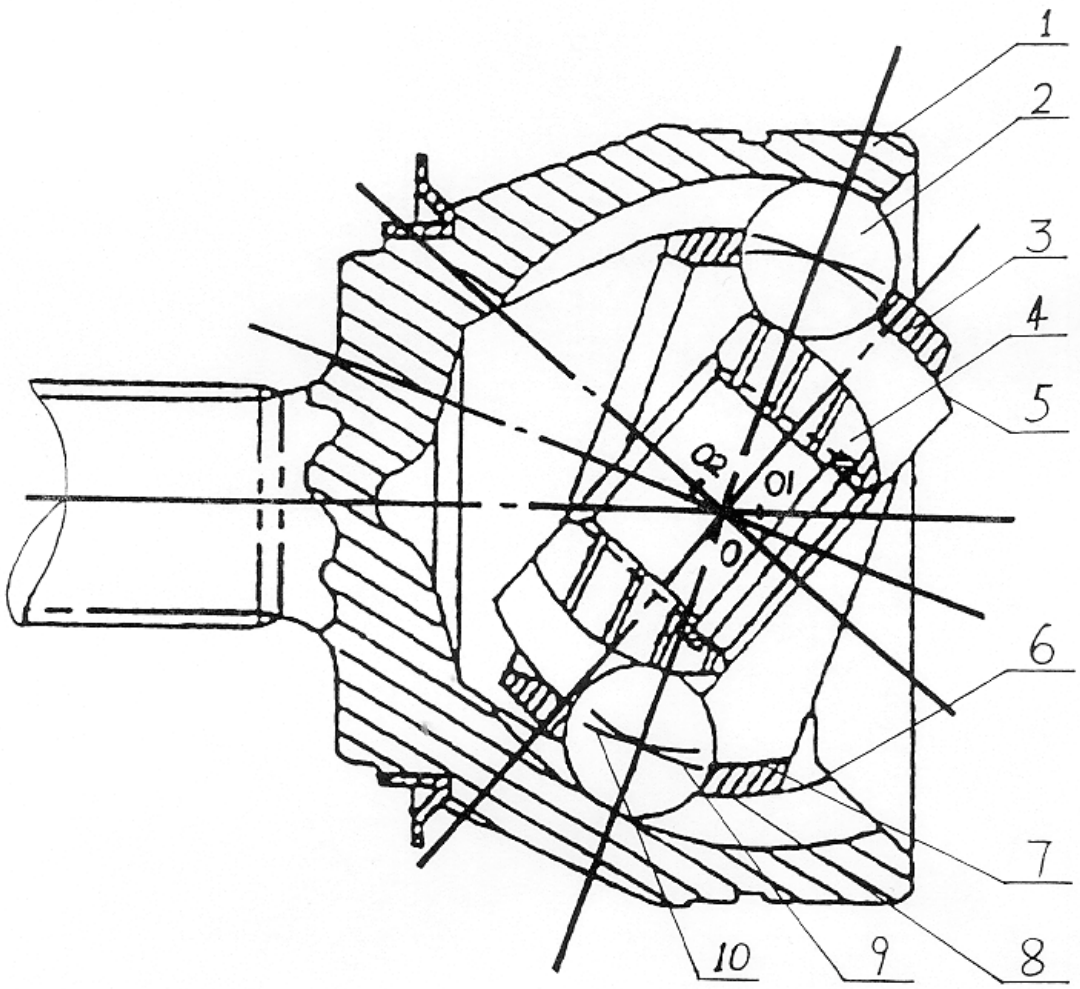

1 Outer Race	5 I.R. Sphere	9 Ball Ctr. Trace in O.R. Groove
2 Ball	6 O.R. Sphere	10 Ball Ctr. Trace in I.R. Groove
3 Cage	7 Cage ID Sphere	
4 Inner Race	8 Cage OD Sphere	

Fig. 1 Rzeppa CV Joint

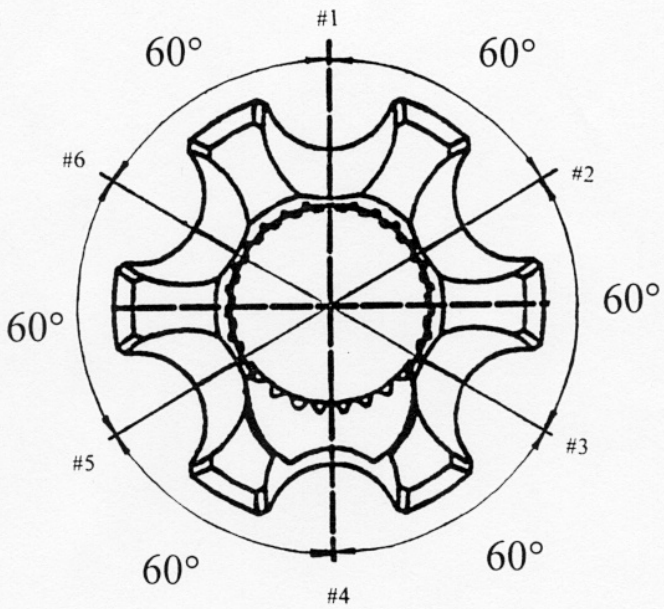

(a) The ideal spacing

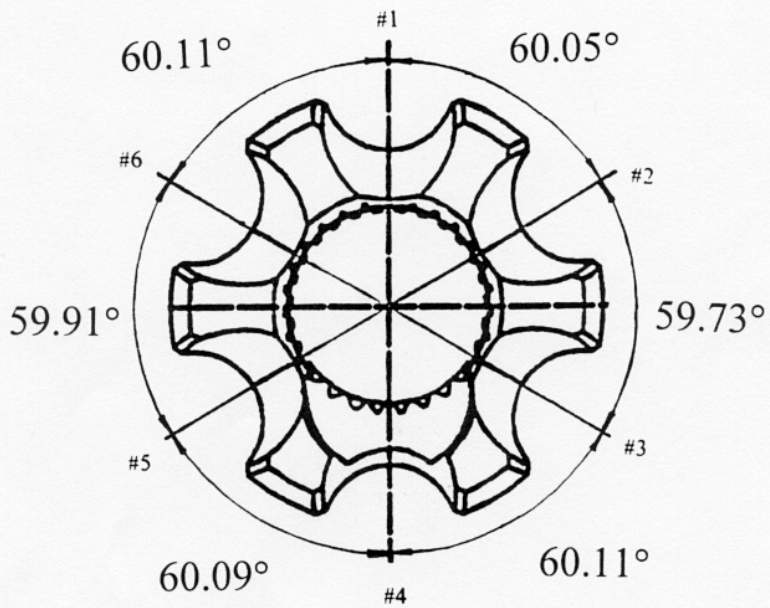

(b) The inspected spacing

Figure 2 The Angular Spacing of Inner Race Grooves

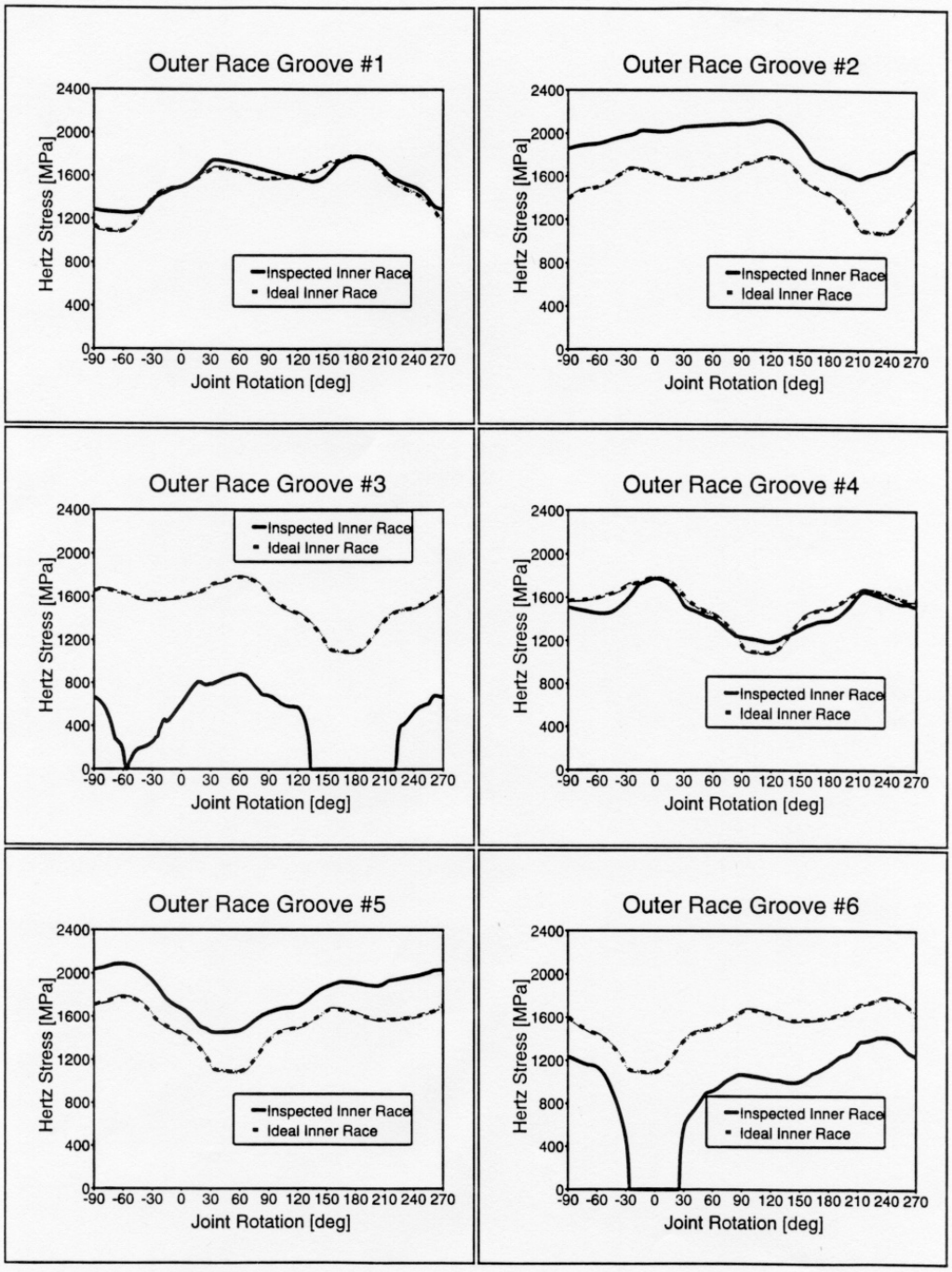

Figure 3 The Hertz Stress Simulation

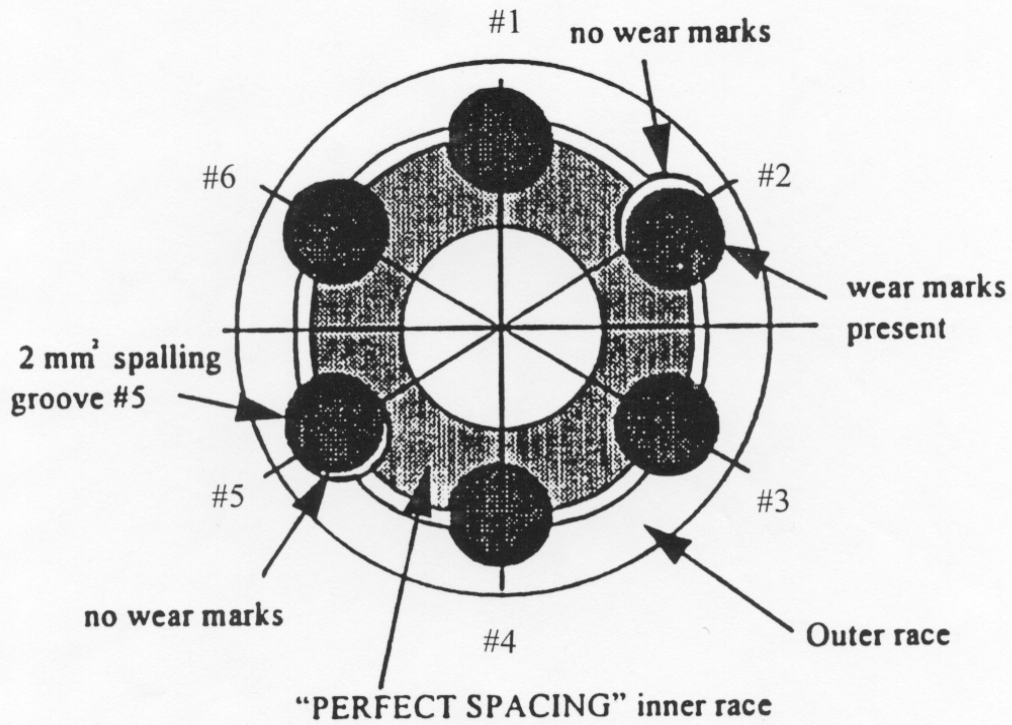

Figure 4 The Durability Test Report for The Inspected Inner Race

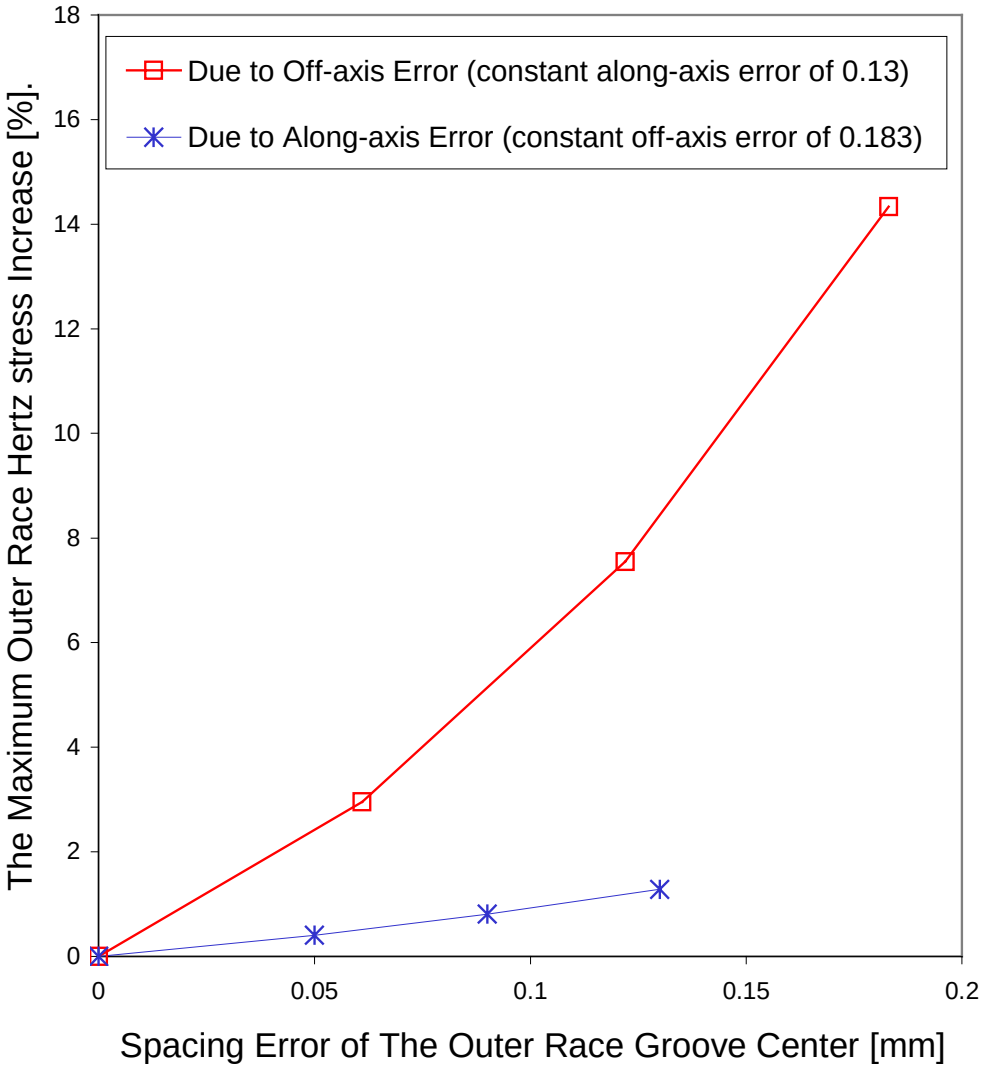

Figure 5 Hertz Stress Sensitivity to Outer Race Groove Center Spacing Error