INTEGRATING ADAMS AND MSC/NASTRAN IN THE DESIGN CYCLE

Dave Riesland
Senior Engineering Analyst

Mechanical Dynamics, Inc.
Ann Arbor, MI

ABSTRACT

In order to bring better products to the market faster and at less cost, aerospace companies around the world are embracing the concept of concurrent engineering at a system level. ADAMS, the world leader in Mechanical System Simulation (MSS), ties together diverse component design and analysis technologies such as Computer Aided Design (CAD) and Finite Element Analysis (FEA) in a single system virtual prototype, providing a more complete understanding of product performance. In short, MSS provides the critical enabling technology for meeting true concurrent engineering goals.

INTRODUCTION

Increasing global competition and shrinking defense budgets are putting tremendous demands on aerospace companies. They not only need to shorten product development time, they also must design higher-quality, better-performing products at lower costs. In this effort, aerospace companies are attempting to reduce their reliance on physical prototypes and testing, which cost these companies millions of dollars and can add months to the product development cycle.

Manufacturers in the aerospace industry are thus replacing many of the tasks once done through hardware testing with virtual prototyping. With this technology, software simulates mechanical system behavior so that engineers can quickly investigate multiple design alternatives that would be impractical to test with hardware prototypes, and they can zero in on design problems that would otherwise be difficult to detect.

ADAMS

One of the primary tools for virtual prototyping is mechanical system simulation, which enables engineering teams to predict the real-world operational behavior of aircraft, space vehicles and other complex mechanical system designs having many interconnected moving parts. The most widely-used software for mechanical system simulation (MSS) is ADAMS (Automatic Dynamic Analysis of Mechanical Systems) from Mechanical Dynamics, Inc. of Ann Arbor, Michigan. ADAMS has an estimated 60% share of the commercial MSS software market, according to recent industry research.

ADAMS is a general-purpose mechanical system simulation tool that provides a dynamic simulation of highly complex and non-linear mechanical models. The simulation engine in ADAMS is called ADAMS/Solver. During a simulation, ADAMS/Solver computes time-dependent translational and angular displacements, velocities, and accelerations of all mechanical system parts, as well as the reaction and applied forces on each of the parts at the constrained and inertial locations. Thus, ADAMS/Solver provides a complete description of the mechanical system for a mechanical system simulation. The simulation results stored in the state vector can be plotted, tabulated, or animated.

ADAMS—MSC/NASTRAN INTERFACE

To accurately simulate a multibody mechanism that includes one or more components whose flexure significantly affects the system performance or loading, the analyst must include flexible characteristics in the model. ADAMS/FEA automates the exchange of data between ADAMS and finite element analysis software, providing the designer or analyst with accurate loading conditions for FEA and a more complete understanding of flexibility effects on mechanical system behavior.

Two methods are available to add flexibility to an ADAMS model via ADAMS/FEA. The first method, commonly called the lumped mass or discrete method, replaces a rigid part with a series of lumped masses with intervening stiffness and damping. In general, this technique is useful for obtaining gross flexible characteristics. However, it requires care in the placement and number of lumped masses and in defining the intervening force elements. For parts with flexible behavior, this is often feasible. It becomes more difficult or impossible for parts with complicated flexible behavior that involves bending in multiple planes and/or coupling effects.

The second method is the assumed modes method. The assumed mode method employs a set of eigenvectors or modes to approximate the deformation of the elastic body, and is, therefore, referred to as modal flexibility. Because the eigenvectors and eigenvalues are obtained from mass and stiffness information, it is often easier to preserve meaningful and adequate mass properties with an assumed modes method based on eigenvectors.

The most widely used FEA software in the aerospace industry is MSC/NASTRAN. While there are several proprietary versions of NASTRAN available, the most widely known proprietary version is MSC/NASTRAN that is developed and maintained by the MacNeal-Schwendler Corporation. MSC/NASTRAN, releases 68 and 69, are the versions of MSC/NASTRAN supported by ADAMS/FEA.

By using existing MSC/NASTRAN finite element models and ADAMS/FEA, engineers can easily incorporate flexible characteristics into highly complex mechanical models whose flexure significantly affects system performance and loading conditions. If the analyst is interested in more accurate loading conditions for detailed stress analysis, ADAMS/FEA converts the dynamic load history into a set of external and internal loads that can be used in a MSC/NASTRAN linear static analysis.

EXAMPLES

In order to stress the importance of system level analysis vs. component level analysis, two examples are presented. The first example is an aircraft cargo door latch system that involves the interaction of a latching mechanism and fuselage structure (stiffness and deflected shape), while the second example, an aircraft landing gear and brake system, illustrates how the interaction between the landing gear and the brake system drastically effects the overall system performance.

Aircraft Cargo Door

Figures 1 and 2 show a cargo door on a commercial aircraft. The placement of the door on the aircraft is shown in Figure 1, while the door hardware is displayed in Figure 2. The power drive unit provides the majority of the door motion during opening and closing and, during the closing sequence, aligns the door so that the lower latch actuator system can bring the door to its final closed position. The lower latch actuator system is a series of three actuators that drive eight hooks at the bottom of the door. The hooks engage with spools that are attached to the door jamb structure, and this interaction brings the door to a closed position and locks the door in place during transport.

When the aircraft is on the ground for service, refueling, etc., the door is opened while airplane is loaded with passengers, cargo and fuel. This, coupled with the weight of the aft fuselage and engine, deflects the door jamb, while the open door remains unloaded and undeflected. When the door is closed, the lower latch actuator system must force the undeflected door into the deflected jamb.

ADAMS was used to simulate door closing in a virtual prototyping environment because previous designs underestimated the mechanism force requirements to close the door, resulting in costly testing, redesigns and delays in certification. Using existing MSC/NASTRAN fuselage FEM's to obtain stiffness and deflection data, ADAMS provided the link between mechanical system requirements and fuselage stiffness & deflections.

By using ADAMS and MSC/NASTRAN, engineers were able to verify system functionality and optimize individual components such as actuators and hooks before making new hardware and performing certification tests on the aircraft. Figures 3 and 4 show analytical results of actuator force and displacement curves for the maximum aircraft loading conditions.

Once the design was finalized, the airplane was retrofitted with new hardware and tested. The cargo door closed with the maximum aircraft loading condition applied and the test results correlated very well with analysis. Figure 5 shows actuator forces and deflections obtained from measurement during aircraft testing.

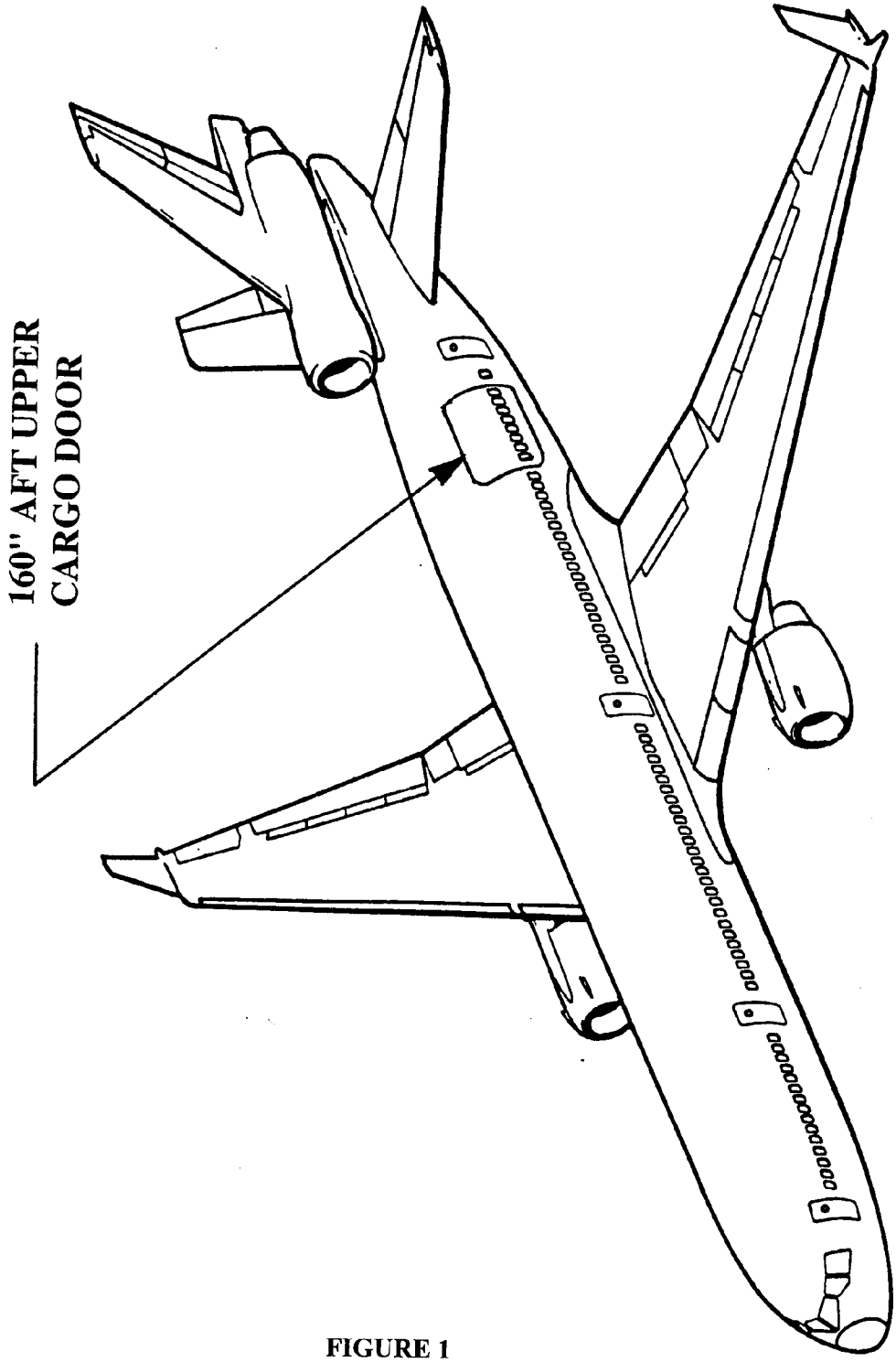

FIGURE 1

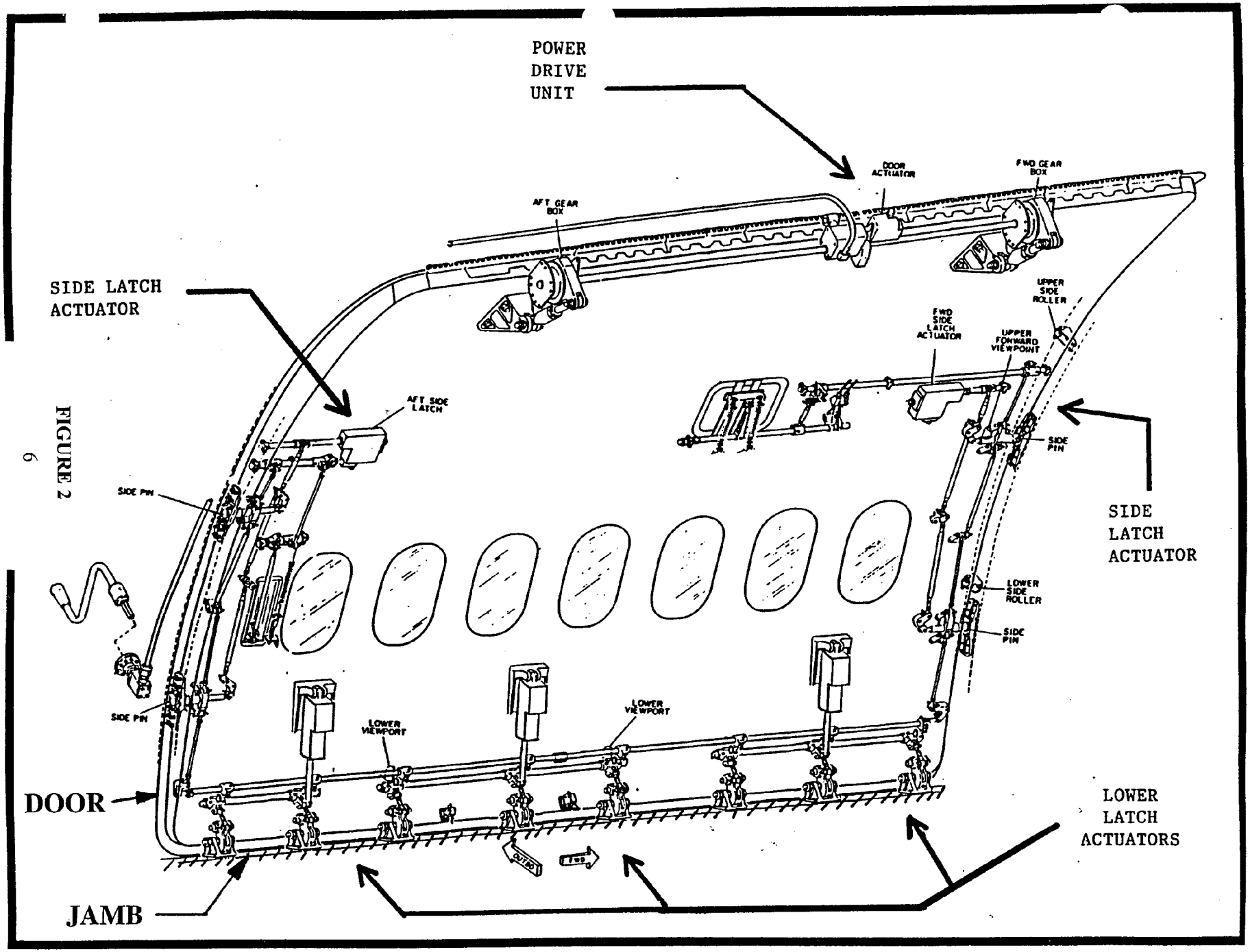
POWER
DRIVE
UNIT
DOOR ACTUATOR
FWD GEAR BOX
AFT GEAR BOX
SIDE LATCH
ACTUATOR
UPPER SIDE ROLLER
FWD SIDE LATCH ACTUATOR
UPPER FORWARD VIEWPOINT
AFT SIDE LATCH
SIDE PIN
SIDE PIN
SIDE
LATCH
ACTUATOR
LOWER SIDE ROLLER
SIDE PIN
SIDE PIN
LOWER VIEWPORT
LOWER VIEWPORT
DOOR
LOWER
LATCH
ACTUATORS
JAMB

FIGURE 2

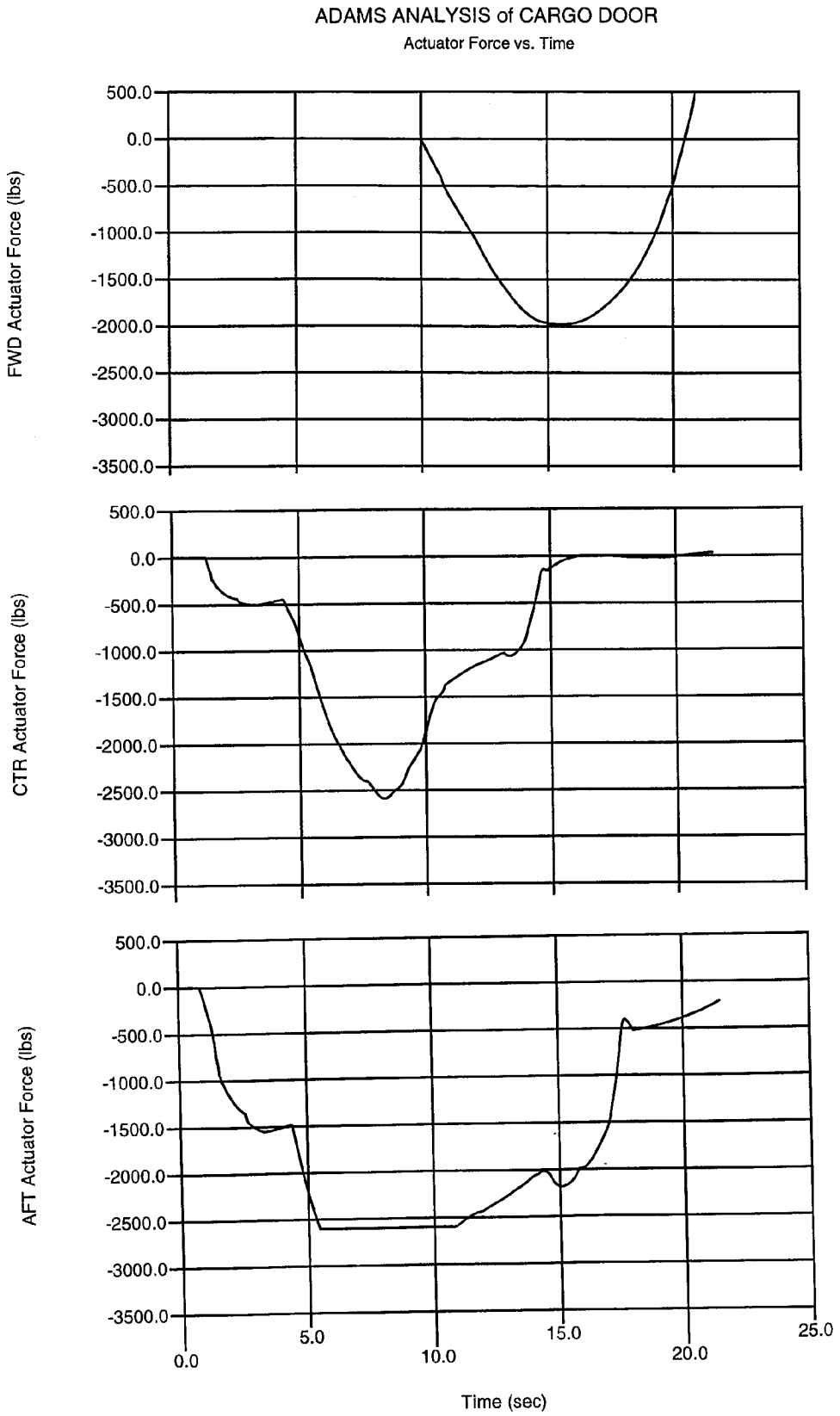
ADAMS ANALYSIS of CARGO DOOR
Actuator Force vs. Time
FWD Actuator Force (lbs)
CTR Actuator Force (lbs)
AFT Actuator Force (lbs)
500.0
0.0
-500.0
-1000.0
-1500.0
-2000.0
-2500.0
-3000.0
-3500.0
0.0
5.0
10.0
15.0
20.0
25.0
Time (sec)

FIGURE 3

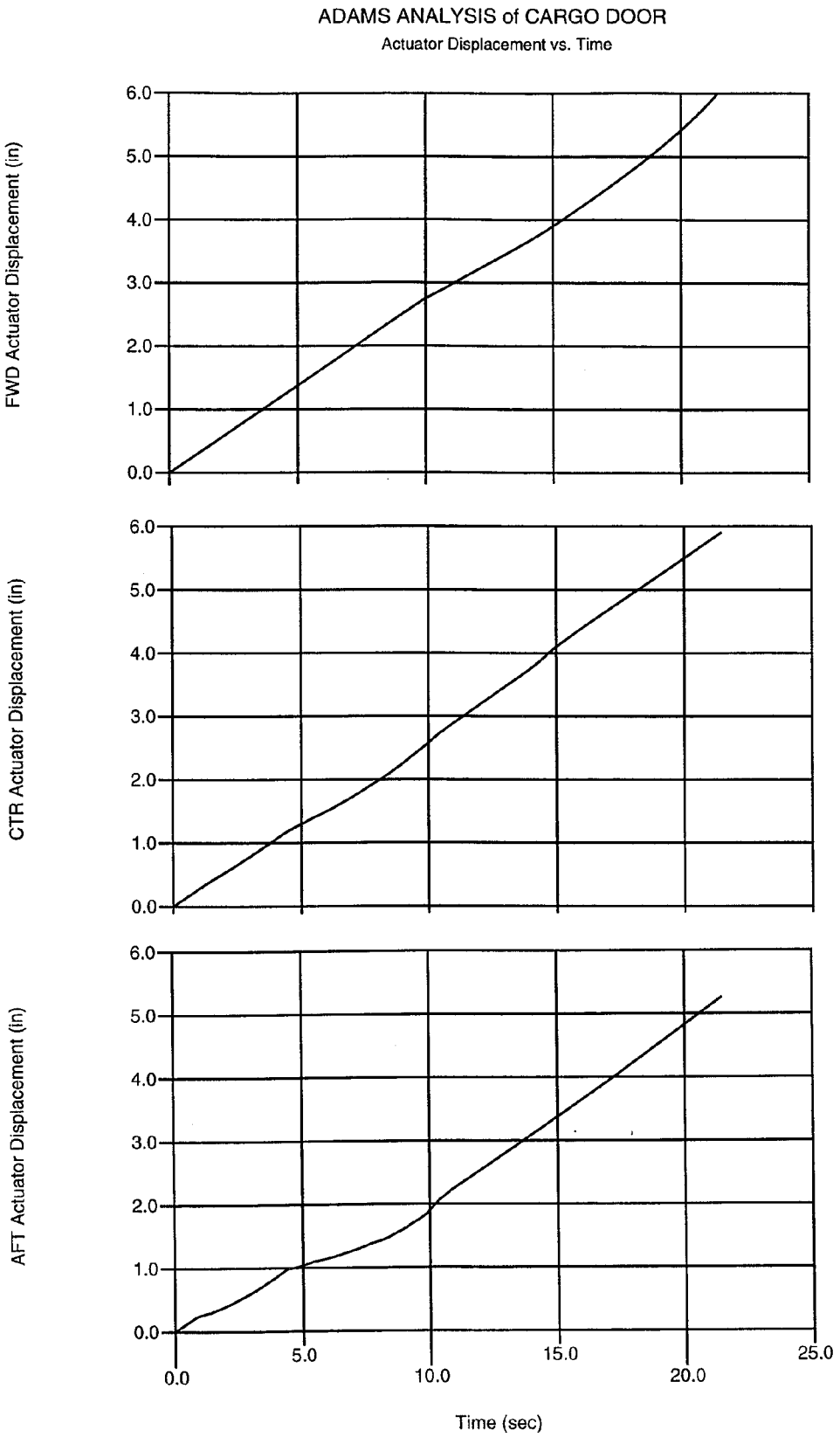
ADAMS ANALYSIS of CARGO DOOR
Actuator Displacement vs. Time
FWD Actuator Displacement (in)
CTR Actuator Displacement (in)
AFT Actuator Displacement (in)
6.0
5.0
4.0
3.0
2.0
1.0
0.0
0.0
5.0
10.0
15.0
20.0
25.0
Time (sec)

FIGURE 4

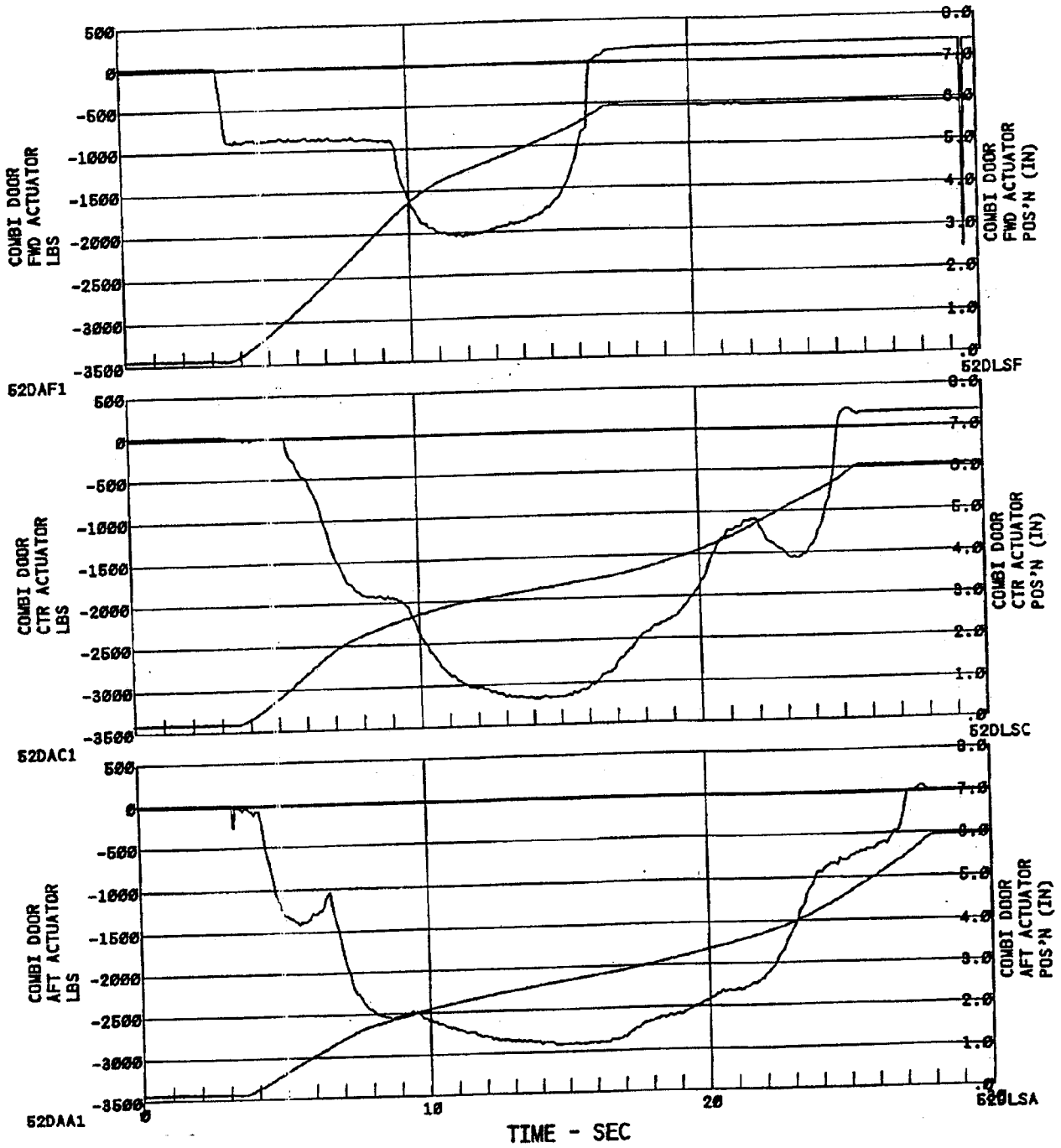
COMBI DOOR FWD ACTUATOR LBS
COMBI DOOR FWD ACTUATOR POS'N (IN)
52DAF1
52DLSF
COMBI DOOR CTR ACTUATOR LBS
COMBI DOOR CTR ACTUATOR POS'N (IN)
52DAC1
52DLSC
COMBI DOOR AFT ACTUATOR LBS
COMBI DOOR AFT ACTUATOR POS'N (IN)
52DAA1
52DLSA
500
0
-500
-1000
-1500
-2000
-2500
-3000
-3500
8.0
7.0
6.0
5.0
4.0
3.0
2.0
1.0
.0
0
10
20
TIME - SEC

FIGURE 5

Aircraft Landing Gear and Brake System

Figure 6 is a typical landing gear, brake and wheel assembly for a small to medium sized commercial aircraft. Braking occurs when the pilot applies force to the pedals. This activates a metering valve that controls pressure in a hydraulic supply line to the brakes. Pistons that are extended in the pressurized brake housing, squeeze rotating and stationary disks together. This in turn, causes friction at the rotating and stationary disk interfaces, and develops the desired brake torque.

A common problem associated with brake and landing gear systems is a phenomena termed brake squeal. Brake squeal is an audible noise which usually contains a single stationary frequency in the 150 to 300 Hz range, although frequencies up to 2000 Hz have been measured. A typical brake squeal event is shown in Figure 7. The top plot is an acceleration time history from the outboard axle tip, while the bottom plot is a spectral analysis of that time history. The acceleration magnitudes are on the order of 12 to 15 g's at a frequency of approximately 170 Hz.

During the development program of this aircraft, analysis of the brake assembly and laboratory dynamometer tests demonstrated the vibration levels were below the acceptable limits. However, when the brakes were installed on the aircraft, brake application during taxi conditions produced undesirable noise in the aircraft cabin and high acceleration loading on the landing gear. Although the individual components of the brake, wheel, tire and landing gear assembly met established design criteria, the overall performance of the system was unacceptable. This resulted in costly, time consuming aircraft testing and design changes that could have been avoided if system-level virtual prototyping technology had been applied.

In order to simulate this brake squeal event in a virtual prototyping environment, ADAMS was used to model the landing gear, brake, wheel and tire assembly. Flexibility of the landing gear and key wheel components was obtained from MSC/NASTRAN FEM's, and transferred into ADAMS via ADAMS/FEA. Aircraft operating conditions that initiated the squeal event were applied to the ADAMS model and an analysis was performed. Results of the analysis, shown in Figure 8, correlated very closely with test data in terms of both amplitude and frequency.

Once this type of event is simulated on the computer, design studies can be performed to identify dependent and sensitive parameters that induce and sustain brake squeal. After these parameters are identified, design changes can be made to reduce or eliminate the undesirable noise and extreme loading conditions.

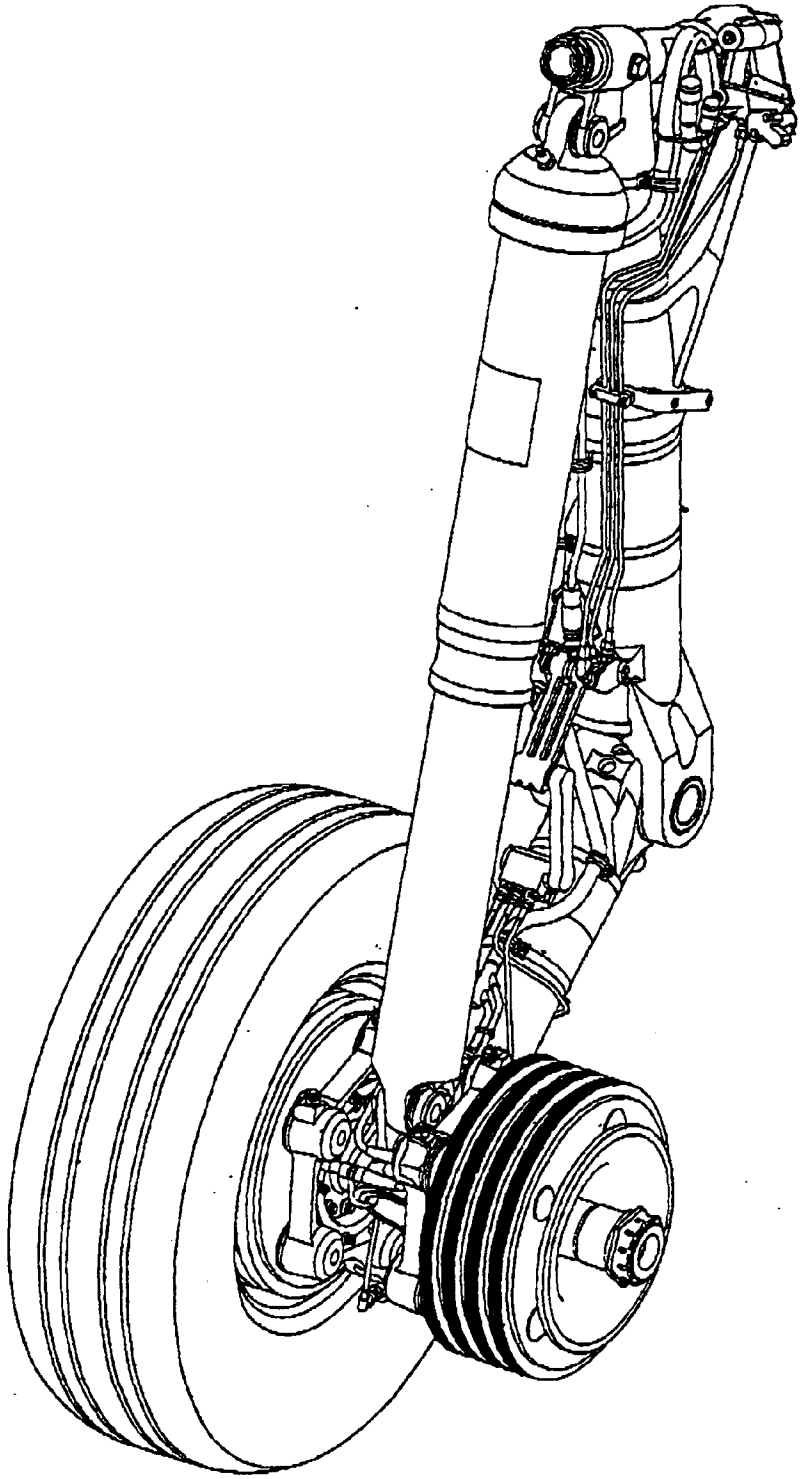

FIGURE 6

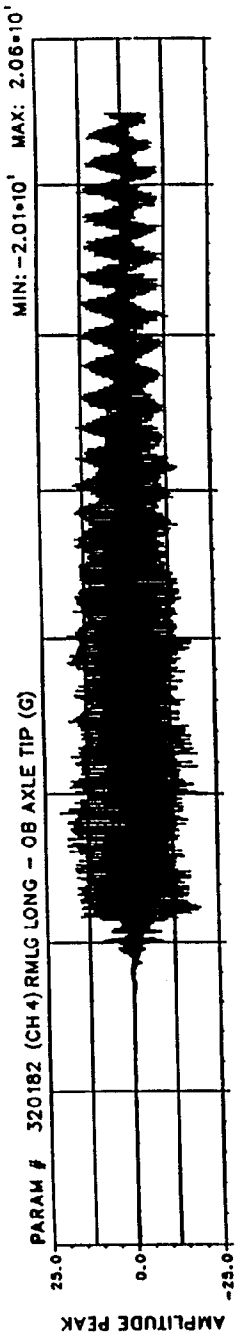
PARAM # 320182 (CH 4) RMLG LONG -- OB AXLE TIP (G)
MIN: -2.01•10¹ MAX: 2.06•10¹
AMPLITUDE PEAK
25.0
0.0
-25.0

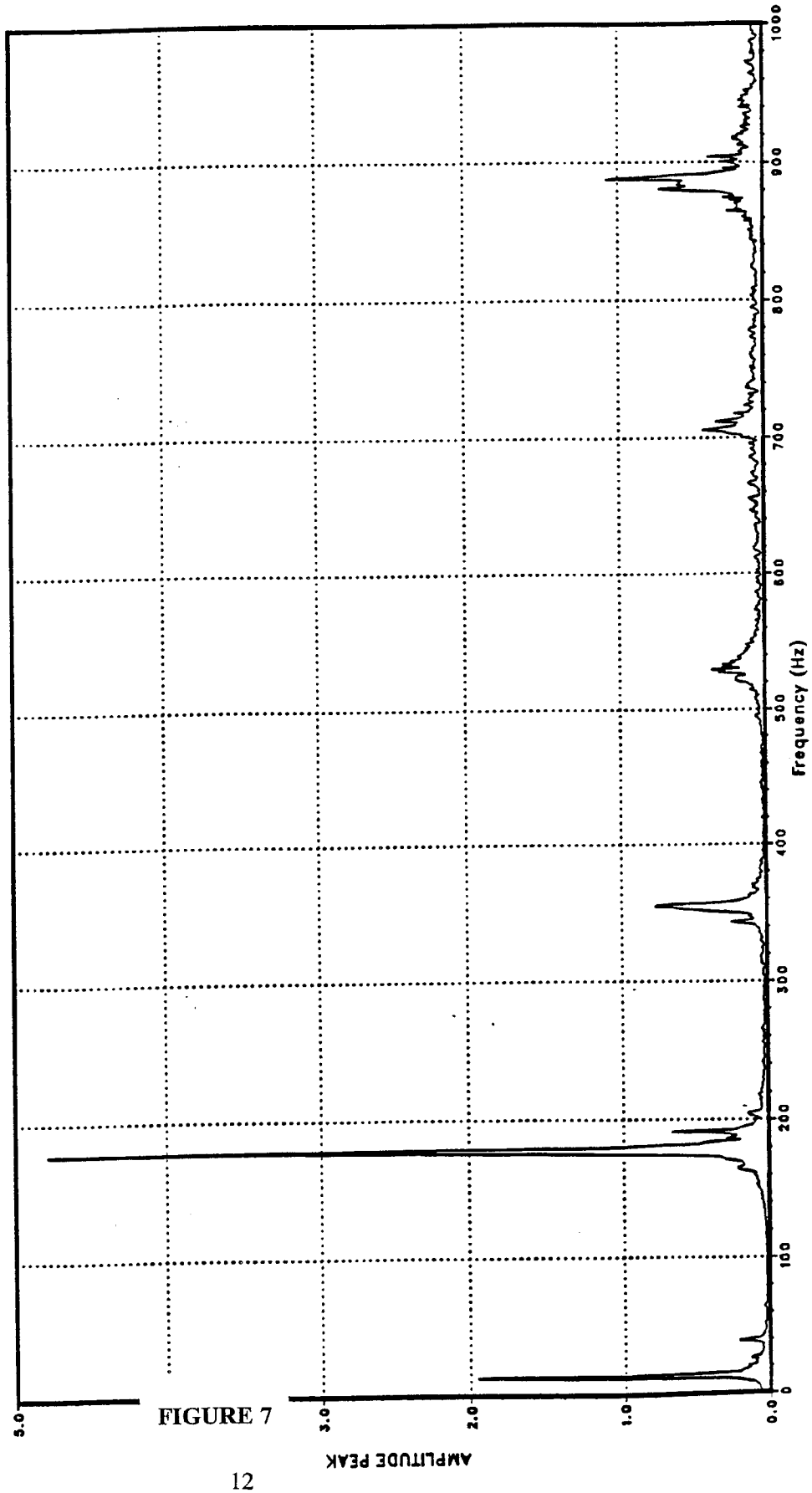
AMPLITUDE PEAK
5.0
3.0
2.0
1.0
0.0
Frequency (Hz)
0
100
200
300
400
500
600
700
800
900
1000

FIGURE 7

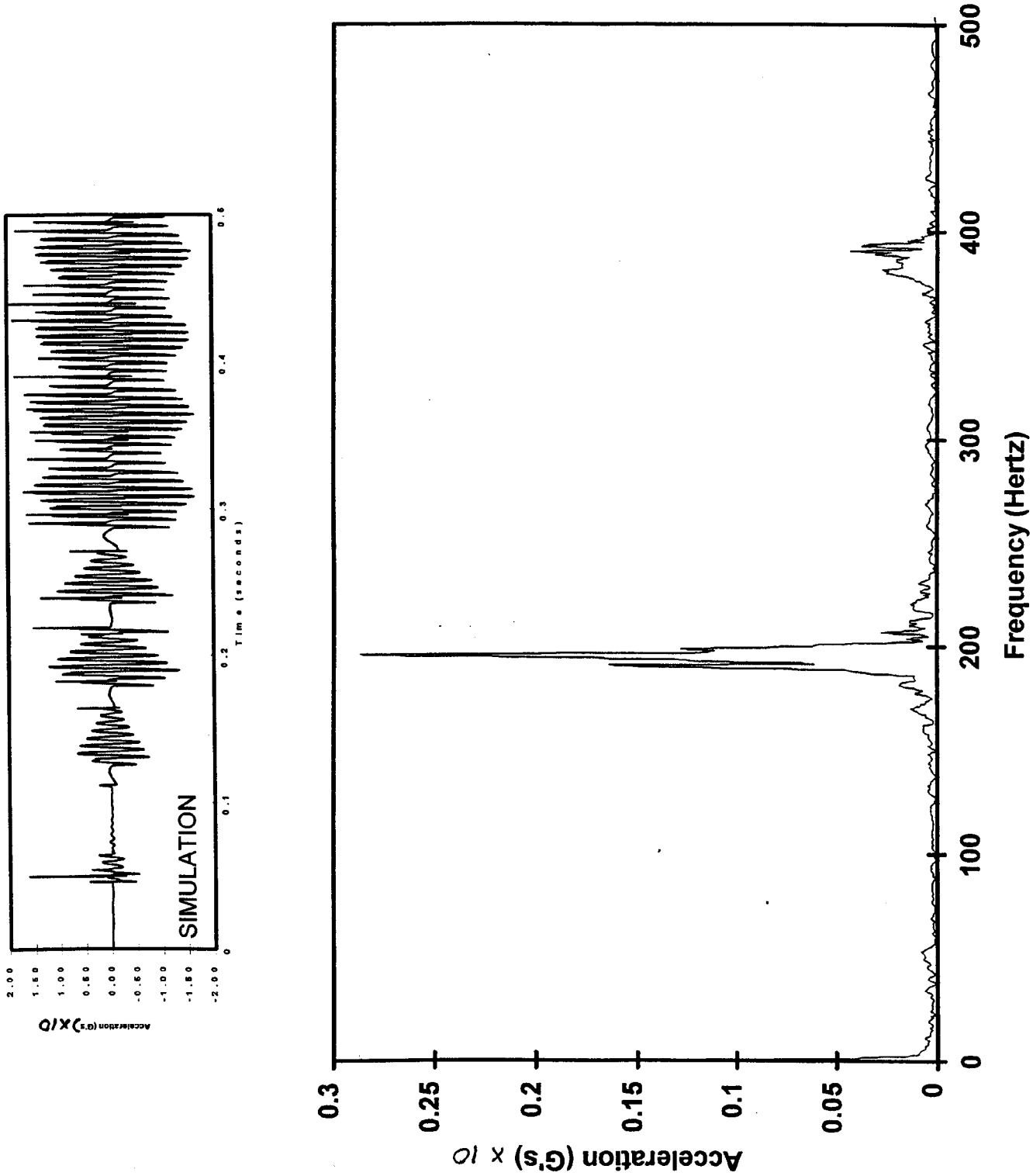
SIMULATION
Time (seconds)
Acceleration (G's) x 10
Frequency (Hertz)
Acceleration (G's) x 10

FIGURE 8

DISCUSSION and CONCLUSIONS

As seen from the two examples, optimum component design does not necessarily lead to optimum system design. In the virtual prototyping environment, engineering teams use mechanical system simulation software to tie together key component technologies and realistically simulate design behavior from a system level, quickly analyzing multiple design variations until achieving an optimal design. By doing this on the computer, engineers can investigate many alternatives that would be impractical to test with hardware prototypes. Also, computer analysis of the many variables involved helps engineers zero in on sources of problems that otherwise would be difficult to detect in complex designs.

In today's highly competitive marketplace, aerospace companies are under increasing pressure to build higher quality products and bring them to market faster. In order to do this, they are employing mechanical system simulation technology to reduce their reliance on costly physical prototyping and testing. By integrating ADAMS and MSC/NASTRAN in the design cycle, aerospace companies are able to meet true concurrent engineering goals.