MSC/NASTRAN: SHELL AND SOLID ELEMENT MESH REQUIREMENTS IN THE VICINITY OF A CIRCULAR HOLE STRESS CONCENTRATION

Robert P. Thacker, Jr.
Boeing Computer Support Services
PO Box 7228
Huntsville, Alabama
(205)-544-3181

ABSTRACT

This paper takes a look at the mesh density requirements when the geometry is a flat plate, has a circular hole, and is subjected to a uniform tension along two opposite edges. The program to be used is MSC/NASTRAN[1], version 67, a finite element program from MacNeal-Schwendler Corporation. The elements used are the 8 node parabolic shell, 8 node linear solid, and the 20 node parabolic solid. The objective is to determine the number of elements, in the radial and angular directions, to achieve an accuracy in deflection and in stress of less than 2% error. The mesh density to achieve the 2% error criteria will be checked on all nodes along 3 straight lines, at angles 0, 45, and 90 degrees, from the hole to the edge of the plate and also all nodes around the circumference of the hole.

INTRODUCTION

The geometry is a 40 inch by 40 inch by 1 inch thick flat plate with a 1 inch radius circular hole in the center. The loading is a uniform pressure of 1000 psi on two opposite edges. (See Figure 1.)

The reason for the objective of 2% error is based on two things. The first is an article by MacNeal and Harder[2]. In the article, for an element to get a grade of A, it had to have less than 2% error. The second is that more and more materially nonlinear analysis is being performed. Because a nonlinear analysis is iterative, a 5% or higher error in each iteration will quickly lead to a solution of limited value.

The material properties are: E = 30,000,000 psi; ν = .3.

This is a plane stress situation. An exact solution for the stress at any point on the plate are repeated from a reference by Timoshenko and Goodier[3]. Note: the polar coordinate, $r\theta$, system is used. (See Figure 1)

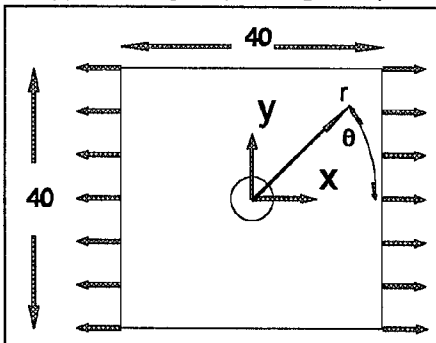

Figure 1: 40 inch by 40 inch by 1 inch thick flat plate with a 2 inch diameter hole. The loading is 1000 psi.

$$\sigma_r = \frac{S}{2}\left(1 - \frac{a^2}{r^2}\right) + \frac{S}{2}\left(1 + \frac{3a^4}{r^4} - \frac{4a^2}{r^2}\right)\cos 2\theta$$

$$\sigma_\theta = \frac{S}{2}\left(1 + \frac{a^2}{r^2}\right) - \frac{S}{2}\left(1 + \frac{3a^4}{r^4}\right)\cos 2\theta$$

a = *the radius of the hole* ; *in this case* a = 1.

S = *uniform tension in the x direction* ; *in this case* S = 1000.

σ_r = *normal stress in the r direction*

σ_θ = *normal stress in the* θ *direction*

Timoshenko does not give explicit relationships for the radial displacement, u_r, or the tangential displacement, u_θ. These were derived by the author of this paper, and are presented here for completeness.

$$u_r = \frac{S}{2E}\left[\cos 2\theta\left(r(1+\nu) - \frac{a^4(1-\nu)}{r^3} + \frac{4a^2}{r}\right)\right]\left[r(1-\nu) + \frac{a^2(1+\nu)}{r}\right]$$

$$u_\theta = \frac{S}{2E}\left[\sin 2\theta\right]\left[-r(1+\nu) - \frac{a^4(1+\nu)}{r^3} - \frac{2a^2(1-\nu)}{r}\right]$$

PROBLEM DEFINITION

The models were created on the IBM 3084Q (MVS/XA), located at Marshall Space Flight Center, using a program written by the author of this paper. The analyses were performed on the Cray X-MP 416

(UNICOS 6.1), also located at Marshall Space Flight Center.

The OUTPUT2 file is processed by a program, also written by the author. This program collects all of the displacements and element nodal stresses, (if necessary it transforms them from the local to the global (basic) coordinate system), and outputs them into a readable file. Another program collects the x and y displacements and element nodal stresses for all nodes in the following 4 groups:

1. All the nodes along angle = 0 from r = 1 to r = 20. (from the edge of the hole to the edge of the plate)
2. All the nodes along angle = 45 from r = 1 to the corner of the plate.
3. All the nodes along angle = 90, from r = 1 to r = 20.
4. All the nodes around the circular hole.

(See Figure 2).

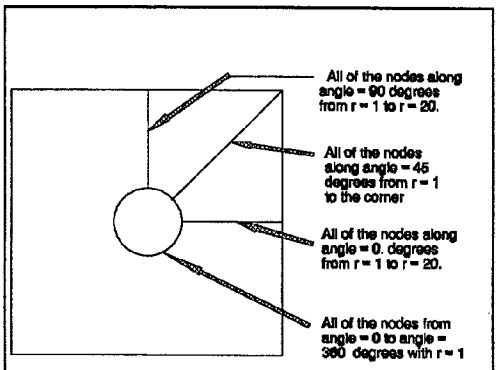

Figure 2: The locations of the nodes where the % error is to be calculated.

The elements to be tested are the shell and solid elements. Specifically: the 8 node parabolic shell (CQUAD8), the 8 node linear solid (CHEXA), and the 20 node parabolic solid (CHEXA). (See Figure 3 and Figure 4.)

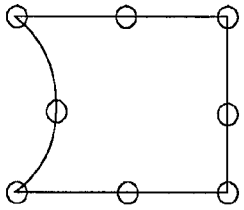

8 node Parabolic Shell - CQUAD8

FIGURE 3: SHELL ELEMENT

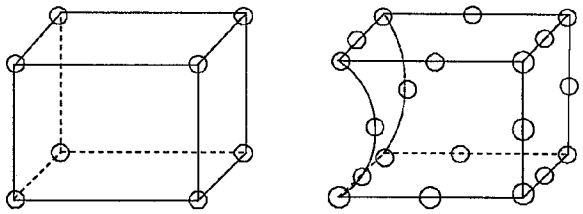

8 Node Linear Solids (CHEXA)

20 Node Parabolic Solids: (CHEXA)

FIGURE 4: SOLID ELEMENTS

The percentage of error is calculated for the x and y displacements for all of the nodes in the 4 groups as stated earlier. This data is plotted and is also saved in a database.

The accuracy of the stresses is much more involved. The decision was made to use the maximum and minimum principal stresses. The element nodal stresses for each node that are along angles 0, 45, and 90 degrees and around the circular hole are saved.

PROCESSING OF THE MAXIMUM PRINCIPAL STRESS ALONG ANGLES 0, 45 AND 90 DEGREES

As stated before, all of the nodes along angles 0, 45, and 90 degrees have been determined. Software written by the author so that the element nodal stresses for each of these nodes are captured such that

we have: a) the maximum of all the maximum principal stresses, b) the minimum of all the maximum principal stresses and c) an average of the component stresses, σ_x, σ_y, σ_z, τ_{xy}, τ_{yz} and τ_{xz}. The eigenvalues of this matrix are calculated via an EISPACK[4] routine so that the average maximum principal stress is determined. Note: initially, a simple average of all of the maximum principal stresses were calculated to determine the average maximum principal stress. However, this proved to be too inaccurate as compared to averaging the component stresses and calculating the eigenvalues.

The solid elements have the component stresses σ_x, etc., in the global coordinate system so a simple average is just a question of adding them up and dividing by the number of elements. However, each shell element has its own coordinate system. Therefore, for shell elements, the component stresses have to be transformed into the global coordinate and then they are averaged. The transformation matrices for this are from Bathe[5], and from Cook[6].

PROCESSING OF THE MINIMUM PRINCIPAL STRESS ALONG ANGLES 0, 45, AND 90 DEGREES.

The maximum of the minimum principal stress, the average of the minimum principal stress, and the minimum of the minimum principal stress are determined in the same manner as discussed above for the maximum principal stress.

PROCESSING OF THE TANGENT PRINCIPAL STRESS AROUND THE CIRCULAR HOLE

As stated before, all of the nodes around the circular hole have been determined. Because of equilibrium, only the principal stress which is tangent to the hole is of interest. The maximum of the tangent principal stress, the average of the tangent principal stress, and the minimum of the tangent principal stress are determined in the same manner as discussed above for the maximum principal stress.

% ERROR CALCULATION and STRESSES BELOW 150 psi.

The % error is determined by: 100 (Exact - Calculated)/ Exact. When the exact stress is small, even calculated stresses which are close to the exact can appear to have very large error. Therefore, when the exact stress is 150 or less, that stress is ignored.

NODES USED

The corner nodes and the midside node were used for the shell elements.
The nodes on the top surface of the 8 node solid were used. The midside nodes (nodes on the midplane) were used for the 20 node solid.

ANALYSIS: PART 1 AND PART 2

Part 1 deals with determining the number of elements necessary in the θ, (angular) direction to obtain less than 2% error. The number of elements in the radial direction is fixed at: 75 in the first 4 radii; then 10 elements to the edge of the plate. (See Figure 5) Therefore, the conclusion from Part 1 will be the necessary number of elements for every 45 degrees around the hole.

Part 2 deals with the number of elements necessary in the radial direction. Its conclusion will be the necessary number of elements in the first, second, third, and fourth radii out from the hole, then how many to the edge of the plate.

PART 1

PART 1: NUMBER OF ELEMENTS, NUMBER OF EQUATIONS

TABLE A - PART 1 : NUMBER OF ELEMENTS; NUMBER OF EQUATIONS

This table shows the number of elements and the number of equations which were in each mesh. In Part 1, the number of elements in the radial direction was always: 75 in the first 4 radii, then 10 to the edge of the plate. The variable (MESH) is the number of elements every 45 degrees, in the θ (tangential) direction.

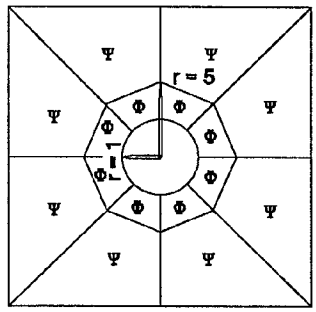

FIGURE 5: Meshes used in PART 1. The Φ meshes have 75 elements in the radial direction. The Ψ meshes have 10 elements in the radial direction.

NUMBER OF ELEMENTS AND ASPECT RATIO FOR EACH MESH
NOTE: FOR EACH MESH THERE ARE 75 ELEMENTS IN THE FIRST 4 RADII; THEN 10 ELEMENTS TO THE EDGE

MESH	ALL ELEMENTS	ALL ELEMENTS
NUMBER OF ELEMENTS EVERY 45 DEGREES	NUMBER OF ELEMENTS	ASPECT RATIO (ANGULAR:RADIAL)
2	1360	7.36:1
3	2040	4.90:1
4	2720	3.68:1
5	3400	2.94:1

NUMBER OF EQUATIONS FOR EACH MESH

MESH	8 NODE SHELL	8 NODE SOLID	20 NODE SOLID
	NUMBER OF EQUATIONS	NUMBER OF EQUATIONS	NUMBER OF EQUATIONS
2	20392	8124	28544
3	30672	12252	42944
4	40952	16380	57344
5	51232	20508	71744

PART 1 - DEFLECTIONS

There is an enormous amount of data, even when plotted. Therefore, the deflection accuracy data is summarized in TABLES, with one TABLE for each element. These TABLES are:
TABLE 1 - PART 1 - 8 Node Shell - Deflection
TABLE 2 - PART 1 - 8 Node Solid - Deflection
TABLE 3 - PART 1 - 20 Node Solid - Deflection

Each TABLE contains a summary of the accuracy of that element along angles 0, 45, and 90 degrees and also around the circular hole. The following is a guide to what some of the headings stand for.
MESH* := number of elements every 45 degrees
NUMBER OF NODES : either number of nodes from the circular hole to the edge of the plate or the number of nodes around the circular hole
NUMBER* : number of nodes which had an error greater than 2%
MAX ERROR : of all the nodes, this error was the highest.
MIN ERROR : of all the nodes, this error was the lowest.
AVERAGE ERROR : the error from each node is added and then divided by the number of nodes.

PART 1 - MAXIMUM PRINCIPAL STRESS

As with the deflections, the maximum principal stress accuracy data is summarized in TABLES, one TABLE for each element. These TABLES are:

TABLE 4 - PART 1 - 8 Node Shell - Maximum Principal Stress
TABLE 5 - PART 1 - 8 Node Solid - Maximum Principal Stress
TABLE 6 - PART 1 - 20 Node Solid - Maximum Principal Stress

The following is a guide to what some of the headings in the TABLES stand for.
MESH* : number of elements every 45 degrees.
STRESS*: the number of nodes which have an exact stress which is lower than 150 psi. These nodes are ignored.
NUMBER*: the number of nodes which have an error greater than 2%.

PART 1 - MINIMUM PRINCIPAL STRESS

As with the deflections, the minimum principal stress accuracy data is summarized in TABLES, one TABLE for each element. These TABLES are:
TABLE 7 - PART 1 - 8 Node Shell - Minimum Principal Stress
TABLE 8 - PART 1 - 8 Node Solid - Minimum Principal Stress
TABLE 9 - PART 1 - 20 Node Solid - Minimum Principal Stress

DISCUSSION: PART 1

We will look at the different element types and their ability to accurately calculate, deflections, maximum principal stress and minimum principal stress.

DISCUSSION: PART 1 - DEFLECTION

The 8 node shell (See Table 1), in all 4 cases (angle = 0, angle = 45, angle = 90, and around the circular hole, will have error less than 2% with 3 elements every 45 degrees.
The 8 node solid (See Table 2), in all 4 cases, will have error less than 2% with 4 elements every 45 degrees.
The 20 node solid (See Table 3), will have error less than 2% for angle = 0 and angle =90 with 3 elements every 45 degrees. However, along angle = 45, the error is consistently -5%, while around the circular hole the error is consistently -10%. It should be remembered that a negative error is produced when the calculated result is larger than the exact result.

DISCUSSION: PART 1 - MAXIMUM PRINCIPAL STRESS

For the principal stresses, we will only be looking at the average nodal stresses.
The 8 node shell (See Table 4), will have an error less than 2% for angle = 45 and angle = 90, with 4 elements every 45 degrees. Along angle = 0, there is a maximum error of 4%. Around the circular hole there is a maximum error of 5%.

The 8 node solid (See Table 5), will have an error less than 2% along angle = 0 and angle = 90, and will only be slightly above 2% along angle = 45. Around the circular hole the results will either be very close or very conservative.
The 20 node solid (See Table 6), with a mesh of 4 elements every 45 degrees, will have an error less than 2% along angle = 45. Along angle = 0 and angle = 90, the results are only slightly above 2%, with 3 and 4% error respectively. Around the circular hole, the max error is +/- 25%.

DISCUSSION: PART 1 - MINIMUM PRINCIPAL STRESS

The minimum principal stresses are recorded only for angles 0 and 45 degrees.

The 8 node shell (See Table 7), with a mesh of 4 elements every 45 degrees, will have an error of -10 and -7% along angle = 0 and angle = 45 respectively.
The 8 node solid (See Table 8), with a mesh of 4 elements every 45 degrees, will have an error of -9 and -11% along angle = 0 and angle = 45 respectively.
The 20 node solid (See Table 9), with a mesh of 4 elements every 45 degrees, will have an error of 48% and -5% along angle = 0 and angle = 45, respectively.

CONCLUSIONS: PART 1

Unfortunately, there is no single clear answer for the mesh to use. However, it appears that 4 elements every 45 degrees is the proper number of elements to use for the 8 node shell and the 8 and 20 node solids.

INTRODUCTION: PART 2

In PART 1, we determined the number of elements necessary in the angular direction. This turned out to be 4 elements every 45 degrees. In PART 2, we are to determine if fewer elements in the radial directions can accomplish the same amount of accuracy as we had for PART 1.

PART 2 - MESHES

There were 6 meshes run for each of the element types. The number of elements in the first radius (α mesh), second radius (β mesh), third radius (γ mesh), fourth radius (δ mesh), and the number of elements to the edge of the plate are in the table: TABLE B - PART 2 - NUMBER OF ELEMENTS IN EACH MESH. (See Figure 6)

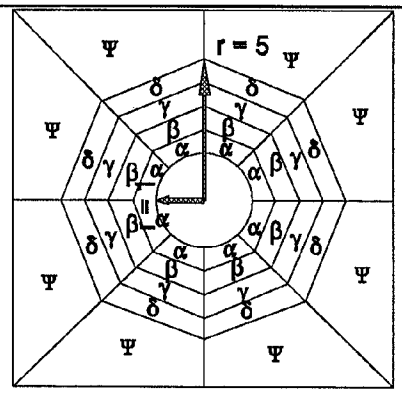

FIGURE 6: Meshes used in PART 2. The number of elements in the α, β γ, δ and Ψ meshes is defined in TABLE B.

TABLE B - PART 2: NUMBER OF ELEMENTS IN EACH MESH

MESH DESCRIPTION	FIRST RADIUS	SECOND RADIUS	THIRD RADIUS	FOURTH RADIUS	TO EDGE OF PLATE
	α	β	γ	δ	Ψ
A	5	5	5	5	5
B	10	10	10	10	10
C	15	15	15	15	15
D	15	10	10	10	10
E	15	15	5	5	5
F	20	15	10	10	10

NUMBER OF ELEMENTS AND NUMBER OF EQUATIONS FOR ALL MESHES IN PART 2

MESH	ALL ELEMENTS	8 NODE SHELL	8 NODE SOLID	20 NODE SOLID
	NUMBER OF ELEMENTS	NUMBER OF EQUATIONS	NUMBER OF EQUATIONS	NUMBER OF EQUATIONS
A	800	11912	4680	16664
B	1600	23512	9180	32864
C	2400	35112	13680	49064
D	1760	25832	10080	36104
E	1440	21192	8280	29624
F	2080	30472	11880	42585

PART 2 - TABLES

The format of the tables is the same as in PART 1. The tables which contain the results of the deflections are:
TABLE 10 - PART 2 - 8 Node Shell - Deflection
TABLE 11 - PART 2 - 8 Node Solid - Deflection
TABLE 12 - PART 2 - 20 Node Solid - Deflection

The tables which contain the results of the maximum principal stress are:
TABLE 13 - PART 2 - 8 Node Shell - Maximum Principal Stress
TABLE 14 - PART 2 - 8 Node Solid - Maximum Principal Stress
TABLE 15 - PART 2 - 20 Node Solid - Maximum Principal Stress

The tables which contain the results of the minimum principal stress are:
TABLE 16 - PART 2 - 8 Node Shell - Minimum Principal Stress
TABLE 17 - PART 2 - 8 Node Solid - Minimum Principal Stress
TABLE 18 - PART 2 - 20 Node Solid - Minimum Principal Stress

DISCUSSION: PART 2 - DEFLECTION

The 8 node shell (See Table 10) for all angles and around the circular hole had less than 2% error for all meshes.

The 8 node solid (See Table 11) had less than 2% error only along angle = 0, for all meshes. Along angle = 45, the Y direction deflection had a consistent error of -3%. Along angle = 90, the Y direction deflection had a consistent error of 4.5%.

The 20 node solid (See Table 12) had less than 2% error along angles 0 and 90 for all meshes. Along angle = 45, the Y direction deflection had a consistent error of -5%, while around the circular hole the Y direction deflection had a consistent error of -10%.

DISCUSSION: PART 2 - MAXIMUM PRINCIPAL STRESS

We are looking at the average nodal stress.
The 8 node shell (See Table 13) had a consistent error of 4% along angle = 0 for all meshes. Along angles 45 and 90, the error is less than 2% for meshes B through F. Around the circular hole, the error is consistently +-5%.

The 8 node solid (See Table 14) had an error greater than 20% along angle = 0. The error along angle = 45 was -2.5% for meshes C-F. The error along angle = 90 was consistently -6%. The error around the circular hole was consistently -25%.

The 20 node solid (See Table 15) along angle = 0 and angle = 45, had an error of approximately -2% for all meshes. Along angle = 90, the error was consistently 4% for all meshes. Around the circular hole, the error was consistently +- 25% for all meshes.

DISCUSSION: PART 2 - MINIMUM PRINCIPAL STRESS

The 8 node shell (See Table 16) had a consistent maximum error of -11% for all meshes along angle = 0. Along angle = 45 the maximum error was consistently -7%.

The 8 node solid (See Table 17) had a consistent maximum error of -48% along angle - 0 for all meshes. Along angle = 45 there was a consistent maximum error of 8%.

The 20 node solid (See Table 18) had a consistent maximum error of 40% along angle = 0 and a consistent maximum error of -6% along angle = 45.

CONCLUSIONS

The number of elements to use in the angular direction is 4 elements every 45 degrees.

The 8 node shell could use any of the meshes B, C, D, E or F. This will give an error in deflection of less than 2% for all angles and around the circular hole. This will result in less than 2% error along angles 45 and 90 for maximum principal stress. Along angle = 0 there will be a max error of 4%. Around the circular hole there will be a maximum error of 4% and a minimum error of -6%. This will result in a maximum error of -11 % in minimum principal stress. These meshes will result in very accurate answers.

The 8 node solid should use meshes C-F. The maximum error, in deflection, for these meshes would be 4.5%. The maximum error, in maximum principal stress would be -6% along angle = 90 and -25% around the circular hole.

The 20 node solid could use meshes B-F. All of these meshes, in maximum principal stress, gave a consistent maximum error of 4% along angle = 90. These meshes will give essentially less than 2% error along angle = 0 and angle =45. The maximum error around the circular hole is +-25%. The maximum error in minimum principal stress is 43%.

A good general rule would be: 4 elements every 45 degrees, then 15 elements in every radius out from the hole.

WARNING

The data and conclusions in this paper should only be used with the MSC/NASTRAN program. The conclusions cannot necessarily be used with another program. The element formulations are not necessarily the same, and the results may not be at all similar.

ACKNOWLEDGEMENTS

This work was performed under NASA contract NAS 8-37200.

REFERENCES

MSC PRODUCTS

1. *MSC/NASTRAN USER'S MANUAL - VERSION 67*, The MacNeal-Schwendler Corporation, 815 Colorado Boulevard, Los Angeles, CA 90041

JOURNALS

2. R. H. MacNeal, R. L. Harder, *A PROPOSED STANDARD SET OF PROBLEMS TO TEST FINITE ELEMENT ACCURACY*, Finite Elements in Analysis and Design, Volume 1, Number 1, April 1985.

BOOKS

3. S. P. Timoshenko, J. N. Goodier, *THEORY OF ELASTICITY*, third edition, McGraw-Hill Book Company, New York, New York, 1970.

4. B. T. Smith, Lecture Notes in Computer Science 6, *MATRIX EIGENSYSTEM ROUTINES - EISPACK GUIDE*, second edition, Springer-Verlag, New York.

5. K. J. Bathe, *FINITE ELEMENT PROCEDURES IN ENGINEERING ANALYSIS*, Prentice-Hall, Inc., Englewood Cliffs, New Jersey, 1982

6. R. D. Cook, *CONCEPTS AND APPLICATIONS OF FINITE ELEMENT ANALYSIS*, John Wiley and Sons, New York, New York, 1981.

TABLE 1 - PART 1 - 8 NODE SHELL - DEFLECTION

8 NODE SHELL ELEMENTS X AND Y DEFLECTION ALONG ANGLE = 0 DEGREES

MESH*	NUMBER OF NODES	X DIRECTION DEFLECTION MAX ERROR	X DIRECTION DEFLECTION MIN ERROR	X DIRECTION DEFLECTION AVERAGE ERROR	X DIRECTION DEFLECTION NUMBER*	Y DIRECTION DEFLECTION MAX ERROR	Y DIRECTION DEFLECTION MIN ERROR	Y DIRECTION DEFLECTION AVERAGE ERROR	Y DIRECTION DEFLECTION NUMBER*
2	171	-0.559	-0.731	-0.698	0	0.000	0.000	0.000	0
3	171	-0.615	-0.729	-0.706	0	0.000	0.000	0.000	0
4	171	-0.607	-0.732	-0.709	0	0.000	0.000	0.000	0
5	171	-0.602	-0.731	-0.709	0	0.000	0.000	0.000	0

8 NODE SHELL ELEMENTS X AND Y DEFLECTION ALONG ANGLE = 45 DEGREES

MESH*	NUMBER OF NODES	X DIRECTION DEFLECTION MAX ERROR	X DIRECTION DEFLECTION MIN ERROR	X DIRECTION DEFLECTION AVERAGE ERROR	X DIRECTION DEFLECTION NUMBER*	Y DIRECTION DEFLECTION MAX ERROR	Y DIRECTION DEFLECTION MIN ERROR	Y DIRECTION DEFLECTION AVERAGE ERROR	Y DIRECTION DEFLECTION NUMBER*
2	171	0.424	-0.794	-0.604	0	1.893	-1.997	-1.630	0
3	171	0.430	-0.727	-0.605	0	1.921	-2.010	-1.636	9
4	171	0.437	-0.727	-0.607	0	1.935	-2.027	-1.644	15
5	171	0.435	-0.726	-0.607	0	1.930	-2.020	-1.642	14

8 NODE SHELL ELEMENTS X AND Y DEFLECTION ALONG ANGLE = 90 DEGREES

MESH*	NUMBER OF NODES	X DIRECTION DEFLECTION MAX ERROR	X DIRECTION DEFLECTION MIN ERROR	X DIRECTION DEFLECTION AVERAGE ERROR	X DIRECTION DEFLECTION NUMBER*	Y DIRECTION DEFLECTION MAX ERROR	Y DIRECTION DEFLECTION MIN ERROR	Y DIRECTION DEFLECTION AVERAGE ERROR	Y DIRECTION DEFLECTION NUMBER*
2	171	0.000	0.000	0.000	0	-1.182	-1.683	-1.605	0
3	171	0.000	0.000	0.000	0	-1.427	-1.704	-1.627	0
4	171	0.000	0.000	0.000	0	-1.405	-1.716	-1.637	0
5	171	0.000	0.000	0.000	0	-1.395	-1.715	-1.635	0

8 NODE SHELL ELEMENTS X AND Y DEFLECTION AROUND THE CIRCULAR HOLE

MESH*	NUMBER OF NODES	X DIRECTION DEFLECTION MAX ERROR	X DIRECTION DEFLECTION MIN ERROR	X DIRECTION DEFLECTION AVERAGE ERROR	X DIRECTION DEFLECTION NUMBER*	Y DIRECTION DEFLECTION MAX ERROR	Y DIRECTION DEFLECTION MIN ERROR	Y DIRECTION DEFLECTION AVERAGE ERROR	Y DIRECTION DEFLECTION NUMBER*
2	32	0.000	-1.062	-0.628	0	0.000	-2.830	-1.599	4
3	48	0.000	-0.814	-0.657	0	0.000	-1.961	-1.628	0
4	64	0.000	-0.740	-0.674	0	0.000	-1.783	-1.653	0
5	80	0.000	-0.753	-0.684	0	0.000	-1.780	-1.661	0

TABLE 2 - PART 1 - 8 NODE SOLID - DEFLECTION

8 NODE SOLID ELEMENTS X AND Y DEFLECTION ALONG ANGLE = 0 DEGREES

MESH*	NUMBER OF NODES	X DIRECTION DEFLECTION MAX ERROR	X DIRECTION DEFLECTION MIN ERROR	X DIRECTION DEFLECTION AVERAGE ERROR	X DIRECTION DEFLECTION NUMBER*	Y DIRECTION DEFLECTION MAX ERROR	Y DIRECTION DEFLECTION MIN ERROR	Y DIRECTION DEFLECTION AVERAGE ERROR	Y DIRECTION DEFLECTION NUMBER*
2	86	2.904	-0.575	0.515	5	0.000	0.000	0.000	0
3	86	0.947	-0.614	-0.146	0	0.000	0.000	0.000	0
4	86	0.240	-0.642	-0.390	0	0.000	0.000	0.000	0
5	86	-0.091	-0.666	-0.502	0	0.000	0.000	0.000	0

8 NODE SOLID ELEMENTS X AND Y DEFLECTION ALONG ANGLE = 45 DEGREES

MESH*	NUMBER OF NODES	X DIRECTION DEFLECTION MAX ERROR	X DIRECTION DEFLECTION MIN ERROR	X DIRECTION DEFLECTION AVERAGE ERROR	X DIRECTION DEFLECTION NUMBER*	Y DIRECTION DEFLECTION MAX ERROR	Y DIRECTION DEFLECTION MIN ERROR	Y DIRECTION DEFLECTION AVERAGE ERROR	Y DIRECTION DEFLECTION NUMBER*
2	86	2.158	-0.502	0.255	5	7.508	-1.282	1.297	24
3	86	0.630	-0.544	-0.217	0	2.432	-1.560	-0.384	7
4	86	0.447	-0.601	-0.388	0	1.956	-1.733	-0.989	0
5	86	0.436	-0.630	-0.466	0	1.926	-1.816	-1.266	0

8 NODE SOLID ELEMENTS X AND Y DEFLECTION ALONG ANGLE = 90 DEGREES

MESH*	NUMBER OF NODES	X DIRECTION DEFLECTION MAX ERROR	X DIRECTION DEFLECTION MIN ERROR	X DIRECTION DEFLECTION AVERAGE ERROR	X DIRECTION DEFLECTION NUMBER*	Y DIRECTION DEFLECTION MAX ERROR	Y DIRECTION DEFLECTION MIN ERROR	Y DIRECTION DEFLECTION AVERAGE ERROR	Y DIRECTION DEFLECTION NUMBER*
2	86	0.000	0.000	0.000	0	8.990	-1.374	1.680	31
3	86	0.000	0.000	0.000	0	3.177	-1.472	-0.143	4
4	86	0.000	0.000	0.000	0	1.055	-1.557	-0.816	0
5	86	0.000	0.000	0.000	0	0.061	-1.605	-1.127	0

8 NODE SOLID ELEMENTS X AND Y DEFLECTION AROUND THE CIRCULAR HOLE

MESH*	NUMBER OF NODES	X DIRECTION DEFLECTION MAX ERROR	X DIRECTION DEFLECTION MIN ERROR	X DIRECTION DEFLECTION AVERAGE ERROR	X DIRECTION DEFLECTION NUMBER*	Y DIRECTION DEFLECTION MAX ERROR	Y DIRECTION DEFLECTION MIN ERROR	Y DIRECTION DEFLECTION AVERAGE ERROR	Y DIRECTION DEFLECTION NUMBER*
2	16	2.904	0.000	1.683	9	8.990	0.000	6.024	15
3	24	0.947	0.000	0.491	0	3.177	0.000	1.859	10
4	32	0.240	-0.091	0.026	0	1.055	-0.039	0.363	0
5	40	0.000	-0.279	-0.203	0	0.061	-0.560	-0.348	0

MESH*: NUMBER OF ELEMENTS EVERY 45 DEGREES
NUMBER*: NUMBER OF NODES WHICH HAVE AN ERROR GREATER THAN 2%

TABLE 3 - PART 1 - 20 NODE SOLID - DEFLECTION

20 NODE SOLID ELEMENTS X AND Y DEFLECTION ALONG ANGLE = 0 DEGREES

MESH*	NUMBER OF NODES	X DIRECTION DEFLECTION MAX ERROR	MIN ERROR	AVERAGE ERROR	NUMBER*	Y DIRECTION DEFLECTION MAX ERROR	MIN ERROR	AVERAGE ERROR	NUMBER*
2	86	0.525	-0.685	-0.512	0	0.000	0.000	0.000	0
3	86	0.322	-0.687	-0.546	0	0.000	0.000	0.000	0
4	86	0.257	-0.691	-0.557	0	0.000	0.000	0.000	0
5	86	0.224	-0.692	-0.562	0	0.000	0.000	0.000	0

20 NODE SOLID ELEMENTS X AND Y DEFLECTION ALONG ANGLE = 45 DEGREES

MESH*	NUMBER OF NODES	X DIRECTION DEFLECTION MAX ERROR	MIN ERROR	AVERAGE ERROR	NUMBER*	Y DIRECTION DEFLECTION MAX ERROR	MIN ERROR	AVERAGE ERROR	NUMBER*
2	86	0.439	-1.829	-0.777	0	1.945	-5.060	-2.233	42
3	86	0.435	-1.820	-0.771	0	1.935	-5.177	-2.228	42
4	86	0.437	-1.817	-0.770	0	1.940	-5.152	-2.227	42
5	86	0.439	-1.831	-0.769	0	1.947	-5.134	-2.224	42

20 NODE SOLID ELEMENTS X AND Y DEFLECTION ALONG ANGLE = 90 DEGREES

MESH*	NUMBER OF NODES	X DIRECTION DEFLECTION MAX ERROR	MIN ERROR	AVERAGE ERROR	NUMBER*	Y DIRECTION DEFLECTION MAX ERROR	MIN ERROR	AVERAGE ERROR	NUMBER*
2	86	0.000	0.000	0.000	0	2.307	-1.675	-1.074	1
3	86	0.000	0.000	0.000	0	1.505	-1.680	-1.178	0
4	86	0.000	0.000	0.000	0	1.258	-1.685	-1.211	0
5	86	0.000	0.000	0.000	0	1.140	-1.686	-1.227	0

20 NODE SOLID ELEMENTS X AND Y DEFLECTION AROUND THE CIRCULAR HOLE

MESH*	NUMBER OF NODES	X DIRECTION DEFLECTION MAX	MIN	AVERAGE	NUMBER*	Y DIRECTION DEFLECTION MAX	MIN	AVERAGE	NUMBER*
2	16	0.525	-3.251	-1.210	4	2.307	-9.032	-3.462	11
3	24	0.322	-3.609	-1.466	8	1.505	-10.266	-4.297	13
4	32	0.257	-3.710	-1.568	12	1.258	-10.650	-4.559	21
5	40	0.224	-3.763	-1.623	16	1.140	-10.807	-4.679	25

MESH*: NUMBER OF ELEMENTS EVERY 45 DEGREES
NUMBER*: NUMBER OF NODES WHICH HAVE AN ERROR GREATER THAN 2%

TABLE 4 - PART 1 - 8 NODE SHELL - MAXIMUM PRINCIPAL STRESS

8 NODE SHELL MAXIMUM PRINCIPAL STRESS ALONG ANGLE = 0.

MESH*	NUMBER OF NODES	STRESS*	MAXIMUM NODAL STRESS MAX ERROR	MIN ERROR	AVERAGE ERROR	NUMBER*	AVERAGE NODAL STRESS MAX ERROR	MIN ERROR	AVERAGE ERROR	NUMBER*	MINIMUM NODAL STRESS MAX ERROR	MIN ERROR	AVERAGE ERROR	NUMBER*
2	171	17	13.542	-1.633	1.359	36	13.556	-1.619	1.423	38	13.542	-1.623	1.482	38
3	171	17	6.192	-1.169	0.284	14	6.193	-1.162	0.321	14	6.192	-1.157	0.357	14
4	171	17	4.097	-1.109	-0.075	6	4.097	-0.968	-0.046	6	4.097	-0.966	-0.017	6
5	171	17	2.633	-1.069	-0.257	1	2.633	-0.905	-0.221	1	2.633	-0.874	-0.185	1

8 NODE SHELL MAXIMUM PRINCIPAL STRESS ALONG ANGLE = 45.

MESH*	NUMBER OF NODES	STRESS*	MAXIMUM NODAL STRESS MAX ERROR	MIN ERROR	AVERAGE ERROR	NUMBER*	AVERAGE NODAL STRESS MAX ERROR	MIN ERROR	AVERAGE ERROR	NUMBER*	MINIMUM NODAL STRESS MAX ERROR	MIN ERROR	AVERAGE ERROR	NUMBER*
2	171	0	-0.233	-8.211	-2.351	128	0.072	-2.877	-2.017	101	8.353	-2.770	-1.672	80
3	171	0	0.003	-2.380	-1.347	1	0.007	-1.650	-1.171	0	2.381	-1.577	-0.983	1
4	171	0	0.077	-1.509	-0.999	0	0.079	-1.228	-0.881	0	0.726	-1.140	-0.760	0
5	171	0	0.101	-1.200	-0.843	0	0.105	-1.005	-0.752	0	0.704	-0.945	-0.661	0

8 NODE SHELL MAXIMUM PRINCIPAL STRESS ALONG ANGLE = 90.

MESH*	NUMBER OF NODES	STRESS*	MAXIMUM NODAL STRESS MAX ERROR	MIN ERROR	AVERAGE ERROR	NUMBER*	AVERAGE NODAL STRESS MAX ERROR	MIN ERROR	AVERAGE ERROR	NUMBER*	MINIMUM NODAL STRESS MAX ERROR	MIN ERROR	AVERAGE ERROR	NUMBER*
2	171	0	0.125	-3.984	-1.610	40	0.133	-3.978	-1.582	38	0.125	-3.984	-1.555	37
3	171	0	0.572	-2.242	-0.967	5	0.574	-2.242	-0.952	5	0.572	-2.242	-0.938	5
4	171	0	0.722	-1.697	-0.748	0	0.722	-1.697	-0.741	0	0.722	-1.697	-0.734	0
5	171	0	0.834	-1.311	-0.646	0	0.834	-1.311	-0.642	0	0.834	-1.311	-0.638	0

8 NODE SHELL TANGENT PRINCIPAL STRESS AROUND THE CIRCULAR HOLE

MESH*	NUMBER OF NODES	STRESS*	MAXIMUM NODAL STRESS MAX ERROR	MIN ERROR	AVERAGE ERROR	NUMBER*	AVERAGE NODAL STRESS MAX ERROR	MIN ERROR	AVERAGE ERROR	NUMBER*	MINIMUM NODAL STRESS MAX ERROR	MIN ERROR	AVERAGE ERROR	NUMBER*
2	32	0	5.742	-29.764	-7.877	32	5.742	-26.861	-4.758	28	8.353	-26.861	-1.692	24
3	48	4	2.349	-8.607	-1.011	22	2.349	-6.784	-0.511	14	2.381	-5.125	-0.015	14
4	64	4	2.806	-7.814	-0.799	14	5.881	-6.254	-0.347	14	8.915	-4.707	0.101	14
5	80	4	0.385	-11.209	-1.239	14	1.717	-9.065	-0.916	14	3.251	-6.935	-0.594	18

MESH*: NUMBER OF ELEMENTS EVERY 45 DEGREES
STRESS*: NUMBER OF NODES WHERE THE EXACT STRESS IS LESS THAN 150 PSI. THESE NODES ARE IGNORED.
NUMBER*: NUMBER OF NODES WHICH HAVE AN ERROR GREATER THAN 2%

TABLE 5 - PART 1 - 8 NODE SOLID - MAXIMUM PRINCIPAL STRESS

8 NODE SOLID MAXIMUM PRINCIPAL STRESS ALONG ANGLE = 0.

MESH*	NUMBER OF NODES	STRESS*	MAXIMUM NODAL STRESS MAX ERROR	MIN ERROR	AVERAGE ERROR	NUMBER*	AVERAGE NODAL STRESS MAX ERROR	MIN ERROR	AVERAGE ERROR	NUMBER*	MINIMUM NODAL STRESS MAX ERROR	MIN ERROR	AVERAGE ERROR	NUMBER*
2	86	9	-0.611	-77.518	-8.880	57	-0.568	-6.877	-2.437	42	0.430	-59.358	-6.700	48
3	86	9	-0.607	-40.913	-5.100	41	0.345	-2.093	-1.301	1	0.826	-21.306	-2.774	25
4	86	9	-0.603	-26.951	-3.663	33	2.040	-1.960	-0.928	1	0.969	-6.959	-1.273	10
5	86	9	-0.600	-20.613	-2.978	29	2.285	-1.896	-0.765	1	1.042	-0.723	-0.555	0

8 NODE SOLID MAXIMUM PRINCIPAL STRESS ALONG ANGLE = 45.

MESH*	NUMBER OF NODES	STRESS*	MAXIMUM NODAL STRESS MAX ERROR	MIN ERROR	AVERAGE ERROR	NUMBER*	AVERAGE NODAL STRESS MAX ERROR	MIN ERROR	AVERAGE ERROR	NUMBER*	MINIMUM NODAL STRESS MAX ERROR	MIN ERROR	AVERAGE ERROR	NUMBER*
2	86	0	0.111	-75.970	-6.884	50	0.172	-2.354	-1.610	30	71.168	-1.915	3.820	16
3	86	0	0.072	-52.262	-5.545	68	0.133	-2.767	-1.830	42	48.160	-2.554	1.986	30
4	86	0	0.095	-40.608	-4.579	63	0.184	-2.558	-1.685	36	36.628	-2.441	1.288	26
5	86	0	0.094	-32.709	-3.909	55	0.152	-2.300	-1.523	25	30.206	-2.172	0.929	20

8 NODE SOLID MAXIMUM PRINCIPAL STRESS ALONG ANGLE = 90.

MESH*	NUMBER OF NODES	STRESS*	MAXIMUM NODAL STRESS MAX ERROR	MIN ERROR	AVERAGE ERROR	NUMBER*	AVERAGE NODAL STRESS MAX ERROR	MIN ERROR	AVERAGE ERROR	NUMBER*	MINIMUM NODAL STRESS MAX ERROR	MIN ERROR	AVERAGE ERROR	NUMBER*
2	86	0	4.829	-4.201	-2.060	69	7.900	-3.378	-1.592	61	5.647	-3.653	-1.738	63
3	86	0	1.620	-2.856	-1.572	31	3.057	-2.346	-1.287	26	2.603	-2.354	-1.283	24
4	86	0	0.854	-2.308	-1.318	15	1.471	-1.903	-1.104	0	1.569	-1.801	-1.046	0
5	86	0	0.893	-1.977	-1.168	0	0.893	-1.653	-0.987	0	1.019	-1.485	-0.905	0

8 NODE SOLID TANGENT PRINCIPAL STRESS AROUND THE CIRCULAR HOLE

MESH*	NUMBER OF NODES	STRESS*	MAXIMUM NODAL STRESS MAX ERROR	MIN ERROR	AVERAGE ERROR	NUMBER*	AVERAGE NODAL STRESS MAX ERROR	MIN ERROR	AVERAGE ERROR	NUMBER*	MINIMUM NODAL STRESS MAX ERROR	MIN ERROR	AVERAGE ERROR	NUMBER*
2	16	0	15.959	-100.000	-46.018	16	18.029	-0.929	9.149	12	100.000	4.829	52.078	16
3	24	4	6.618	-52.262	-21.296	18	7.645	-1.230	3.168	16	48.160	1.620	25.492	18
4	32	0	3.112	-100.000	-31.907	30	3.724	-27.090	-2.469	10	100.000	0.422	32.732	30
5	40	0	1.354	-100.000	-30.263	36	1.759	-14.397	-2.378	8	100.000	-0.169	27.714	36

TABLE 6 - PART 1 - 20 NODE SOLID - MAXIMUM PRINCIPAL STRESS

20 NODE SOLID MAXIMUM PRINCIPAL STRESS ALONG ANGLE = 0.

MESH*	NUMBER OF NODES	STRESS*	MAXIMUM NODAL STRESS MAX ERROR	MIN ERROR	AVERAGE ERROR	NUMBER*	AVERAGE NODAL STRESS MAX ERROR	MIN ERROR	AVERAGE ERROR	NUMBER*	MINIMUM NODAL STRESS MAX ERROR	MIN ERROR	AVERAGE ERROR	NUMBER*
2	86	9	-0.033	-9.427	-1.828	23	2.771	-3.218	-1.432	15	5.962	-3.168	-1.241	11
3	86	9	1.611	-1.622	-0.933	0	2.768	-1.340	-0.776	2	4.359	-1.279	-0.684	2
4	86	9	1.619	-1.201	-0.678	0	3.005	-0.957	-0.532	3	4.636	-0.933	-0.428	3
5	86	9	2.168	-1.141	-0.593	1	2.815	-0.850	-0.467	3	4.408	-0.814	-0.373	4

20 NODE SOLID MAXIMUM PRINCIPAL STRESS ALONG ANGLE = 45.

MESH*	NUMBER OF NODES	STRESS*	MAXIMUM NODAL STRESS MAX ERROR	MIN ERROR	AVERAGE ERROR	NUMBER*	AVERAGE NODAL STRESS MAX ERROR	MIN ERROR	AVERAGE ERROR	NUMBER*	MINIMUM NODAL STRESS MAX ERROR	MIN ERROR	AVERAGE ERROR	NUMBER*
2	86	0	0.113	-18.462	-4.294	70	0.156	-4.673	-2.575	56	10.683	-2.018	-0.878	10
3	86	0	0.133	-11.728	-2.462	37	0.160	-2.666	-1.468	23	8.164	-1.362	-0.501	6
4	86	0	0.140	-8.103	-1.792	25	0.158	-1.882	-1.079	0	5.739	-1.043	-0.377	4
5	86	0	0.141	-5.606	-1.456	19	0.157	-1.520	-0.900	0	3.994	-0.885	-0.347	3

20 NODE SOLID MAXIMUM PRINCIPAL STRESS ALONG ANGLE = 90.

MESH*	NUMBER OF NODES	STRESS*	MAXIMUM NODAL STRESS MAX ERROR	MIN ERROR	AVERAGE ERROR	NUMBER*	AVERAGE NODAL STRESS MAX ERROR	MIN ERROR	AVERAGE ERROR	NUMBER*	MINIMUM NODAL STRESS MAX ERROR	MIN ERROR	AVERAGE ERROR	NUMBER*
2	86	0	2.362	-1.472	1.157	15	2.441	-1.440	1.220	19	2.467	-1.472	1.260	21
3	86	0	3.108	-0.170	0.934	15	3.239	-0.165	0.961	16	3.307	-0.160	0.980	16
4	86	0	4.036	-0.246	0.785	14	4.160	-0.242	0.808	14	4.258	-0.239	0.827	14
5	86	0	4.672	-0.323	0.716	13	4.779	-0.316	0.735	14	4.868	-0.312	0.750	14

20 NODE SOLID TANGENT PRINCIPAL STRESS AROUND THE CIRCULAR HOLE

MESH*	NUMBER OF NODES	STRESS*	MAXIMUM NODAL STRESS MAX ERROR	MIN ERROR	AVERAGE ERROR	NUMBER*	AVERAGE NODAL STRESS MAX ERROR	MIN ERROR	AVERAGE ERROR	NUMBER*	MINIMUM NODAL STRESS MAX ERROR	MIN ERROR	AVERAGE ERROR	NUMBER*
2	16	0	2.308	-24.348	-12.282	14	3.976	-3.873	-0.419	14	30.664	-1.472	10.956	14
3	24	4	10.364	-11.728	-0.466	16	11.977	-1.781	3.887	8	17.517	2.348	8.234	20
4	32	0	13.491	-55.346	-3.280	24	24.954	-26.972	3.633	24	36.370	1.362	10.531	28
5	40	0	32.594	-27.616	4.877	32	54.919	-14.844	10.031	36	76.805	-2.096	15.132	40

MESH*: NUMBER OF ELEMENTS EVERY 45 DEGREES
STRESS*: NUMBER OF NODES WHERE THE EXACT STRESS IS LESS THAN 150 PSI. THESE NODES ARE IGNORED.
NUMBER*: NUMBER OF NODES WHICH HAVE AN ERROR GREATER THAN 2%

TABLE 7 - PART 1 - 8 NODE SHELL - MINIMUM PRINCIPAL STRESS

8 NODE SHELL MINIMUM PRINCIPAL STRESS ALONG ANGLE = 0.

	NUMBER		MAXIMUM NODAL STRESS				AVERAGE NODAL STRESS				MINIMUM NODAL STRESS			
MESH*	OF NODES	STRESS*	MAX ERROR	MIN ERROR	AVERAGE ERROR	NUMBER*	MAX ERROR	MIN ERROR	AVERAGE ERROR	NUMBER*	MAX ERROR	MIN ERROR	AVERAGE ERROR	NUMBER*
2	171	156	-9.687	-31.441	-19.374	15	-9.650	-31.344	-19.286	15	-9.687	-31.265	-19.237	15
3	171	156	-5.125	-16.603	-10.183	15	-5.124	-16.280	-10.146	15	-5.125	-15.962	-10.114	15
4	171	156	-3.458	-10.965	-6.898	15	-3.457	-10.831	-6.860	15	-3.458	-10.698	-6.822	15
5	171	156	-2.499	-8.556	-5.283	15	-2.499	-8.336	-5.242	15	-2.499	-8.213	-5.202	15

8 NODE SHELL MINIMUM PRINCIPAL STRESS ALONG ANGLE = 45.

	NUMBER		MAXIMUM NODAL STRESS				AVERAGE NODAL STRESS				MINIMUM NODAL STRESS			
MESH*	OF NODES	STRESS*	MAX ERROR	MIN ERROR	AVERAGE ERROR	NUMBER*	MAX ERROR	MIN ERROR	AVERAGE ERROR	NUMBER*	MAX ERROR	MIN ERROR	AVERAGE ERROR	NUMBER*
2	171	138	-14.560	-20.218	-17.523	33	-14.412	-19.498	-16.719	33	-12.053	-19.039	-15.921	33
3	171	138	-8.157	-11.887	-9.855	33	-7.704	-10.421	-8.990	33	-6.417	-9.606	-8.010	33
4	171	138	-5.683	-8.857	-7.013	33	-5.368	-7.492	-6.293	33	-4.521	-6.677	-5.586	33
5	171	138	-4.439	-6.657	-5.599	33	-4.380	-5.796	-5.060	33	-3.555	-5.454	-4.509	33

TABLE 8 - PART 1 - 8 NODE SOLID - MINIMUM PRINCIPAL STRESS

8 NODE SOLID MINIMUM PRINCIPAL STRESS ALONG ANGLE = 0.

	NUMBER		MAXIMUM NODAL STRESS				AVERAGE NODAL STRESS				MINIMUM NODAL STRESS			
MESH*	OF NODES	STRESS*	MAX ERROR	MIN ERROR	AVERAGE ERROR	NUMBER*	MAX ERROR	MIN ERROR	AVERAGE ERROR	NUMBER*	MAX ERROR	MIN ERROR	AVERAGE ERROR	NUMBER*
2	86	78	16.235	-71.591	-9.595	8	18.057	-5.109	10.093	8	17.938	-63.508	-6.976	7
3	86	78	6.618	-44.981	-8.698	8	7.645	-9.119	1.371	6	7.360	-35.206	-5.932	8
4	86	78	3.112	-33.397	-8.110	7	3.724	-9.712	-1.402	6	3.646	-23.127	-4.934	7
5	86	78	1.354	-27.031	-7.529	4	1.759	-9.471	-2.468	4	1.791	-16.583	-4.170	4

8 NODE SOLID MINIMUM PRINCIPAL STRESS ALONG ANGLE = 45.

	NUMBER		MAXIMUM NODAL STRESS				AVERAGE NODAL STRESS				MINIMUM NODAL STRESS			
MESH*	OF NODES	STRESS*	MAX ERROR	MIN ERROR	AVERAGE ERROR	NUMBER*	MAX ERROR	MIN ERROR	AVERAGE ERROR	NUMBER*	MAX ERROR	MIN ERROR	AVERAGE ERROR	NUMBER*
2	86	70	-15.974	-43.653	-33.133	16	-4.762	-6.923	-5.569	16	30.601	0.391	22.262	15
3	86	70	-13.209	-37.659	-27.668	16	-2.765	-11.409	-7.538	16	15.530	2.394	13.007	16
4	86	70	-11.699	-31.660	-23.225	16	-1.844	-11.199	-7.197	15	10.936	3.251	9.354	16
5	86	70	-10.721	-27.341	-19.997	16	-1.498	-10.408	-6.617	15	8.641	3.298	7.416	16

TABLE 9 - PART 1 - 20 NODE SOLID - MINIMUM PRINCIPAL STRESS

20 NODE SOLID MINIMUM PRINCIPAL STRESS ALONG ANGLE = 0.

	NUMBER		MAXIMUM NODAL STRESS				AVERAGE NODAL STRESS				MINIMUM NODAL STRESS			
MESH*	OF NODES	STRESS*	MAX ERROR	MIN ERROR	AVERAGE ERROR	NUMBER*	MAX ERROR	MIN ERROR	AVERAGE ERROR	NUMBER*	MAX ERROR	MIN ERROR	AVERAGE ERROR	NUMBER*
2	86	78	47.558	2.308	21.161	8	53.553	2.431	23.634	8	51.962	2.308	23.335	8
3	86	78	47.863	10.364	26.195	8	50.383	10.368	27.345	8	49.797	10.364	27.166	8
4	86	78	46.387	13.454	27.774	8	48.433	13.467	28.618	8	48.522	13.454	28.609	8
5	86	78	45.879	15.015	28.542	8	47.494	15.029	29.247	8	47.689	15.015	29.335	8

20 NODE SOLID MINIMUM PRINCIPAL STRESS ALONG ANGLE = 45.

	NUMBER		MAXIMUM NODAL STRESS				AVERAGE NODAL STRESS				MINIMUM NODAL STRESS			
MESH*	OF NODES	STRESS*	MAX ERROR	MIN ERROR	AVERAGE ERROR	NUMBER*	MAX ERROR	MIN ERROR	AVERAGE ERROR	NUMBER*	MAX ERROR	MIN ERROR	AVERAGE ERROR	NUMBER*
2	86	70	-30.797	-47.609	-36.670	16	-5.904	-18.374	-14.223	16	35.016	-5.113	7.827	13
3	86	70	-16.728	-34.339	-22.468	16	-5.709	-11.002	-8.981	16	22.414	-4.494	4.187	12
4	86	70	-11.855	-27.940	-17.014	16	-5.282	-7.750	-6.844	16	17.163	-3.666	3.270	11
5	86	70	-9.597	-23.473	-14.251	16	-5.030	-6.409	-5.787	16	13.331	-2.827	2.668	9

MESH*: NUMBER OF ELEMENTS EVERY 45 DEGREES
STRESS*: NUMBER OF NODES WHERE THE EXACT STRESS IS LESS THAN 150 PSI. THESE NODES ARE IGNORED.
NUMBER*: NUMBER OF NODES WHICH HAVE AN ERROR GREATER THAN 2%

TABLE 10 - PART 2 - 8 NODE SHELL - DEFLECTION

8 NODE SHELL ELEMENTS X AND Y DEFLECTION ALONG ANGLE = 0 DEGREES

MESH*	NUMBER OF NODES	X DIRECTION DEFLECTION MAX ERROR	MIN ERROR	AVERAGE ERROR	NUMBER*	Y DIRECTION DEFLECTION MAX ERROR	MIN ERROR	AVERAGE ERROR	NUMBER*
A	51	-0.604	-0.732	-0.705	0	0.000	0.000	0.000	0
B	101	-0.607	-0.729	-0.705	0	0.000	0.000	0.000	0
C	151	-0.608	-0.732	-0.705	0	0.000	0.000	0.000	0
D	111	-0.607	-0.732	-0.707	0	0.000	0.000	0.000	0
E	91	-0.604	-0.733	-0.713	0	0.000	0.000	0.000	0
F	131	-0.607	-0.729	-0.709	0	0.000	0.000	0.000	0

8 NODE SHELL ELEMENTS X AND Y DEFLECTION ALONG ANGLE = 45 DEGREES

MESH*	NUMBER OF NODES	X DIRECTION DEFLECTION MAX ERROR	MIN ERROR	AVERAGE ERROR	NUMBER*	Y DIRECTION DEFLECTION MAX ERROR	MIN ERROR	AVERAGE ERROR	NUMBER*
A	51	0.436	-0.705	-0.553	0	1.934	-2.021	-1.456	5
B	101	0.437	-0.708	-0.562	0	1.935	-2.020	-1.488	9
C	151	0.437	-0.731	-0.564	0	1.935	-2.029	-1.495	13
D	111	0.437	-0.731	-0.574	0	1.935	-2.029	-1.529	13
E	91	0.436	-0.731	-0.609	0	1.934	-2.025	-1.669	12
F	131	0.437	-0.721	-0.590	0	1.935	-2.017	-1.592	18

8 NODE SHELL ELEMENTS X AND Y DEFLECTION ALONG ANGLE = 90 DEGREES

MESH*	NUMBER OF NODES	X DIRECTION DEFLECTION MAX ERROR	MIN ERROR	AVERAGE ERROR	NUMBER*	Y DIRECTION DEFLECTION MAX ERROR	MIN ERROR	AVERAGE ERROR	NUMBER*
A	51	0.000	0.000	0.000	0	-1.398	-1.736	-1.629	0
B	101	0.000	0.000	0.000	0	-1.405	-1.716	-1.632	0
C	151	0.000	0.000	0.000	0	-1.407	-1.713	-1.634	0
D	111	0.000	0.000	0.000	0	-1.405	-1.716	-1.628	0
E	91	0.000	0.000	0.000	0	-1.398	-1.736	-1.616	0
F	131	0.000	0.000	0.000	0	-1.405	-1.716	-1.623	0

8 NODE SHELL ELEMENTS X AND Y DEFLECTION AROUND THE CIRCULAR HOLE

MESH*	NUMBER OF NODES	X DIRECTION DEFLECTION MAX	MIN	AVERAGE	NUMBER*	Y DIRECTION DEFLECTION MAX	MIN	AVERAGE	NUMBER*
A	64	0.000	-0.819	-0.673	0	0.000	-1.974	-1.644	0
B	64	0.000	-0.755	-0.671	0	0.000	-1.820	-1.645	0
C	64	0.000	-0.740	-0.678	0	0.000	-1.765	-1.664	0
D	64	0.000	-0.740	-0.678	0	0.000	-1.765	-1.664	0
E	64	0.000	-0.740	-0.679	0	0.000	-1.765	-1.665	0
F	64	0.000	-0.746	-0.676	0	0.000	-1.800	-1.658	0

TABLE 11 - PART 2 - 8 NODE SOLID - DEFLECTION

8 NODE SOLID ELEMENTS X AND Y DEFLECTION ALONG ANGLE = 0 DEGREES

MESH*	NUMBER OF NODES	X DIRECTION DEFLECTION MAX ERROR	MIN ERROR	AVERAGE ERROR	NUMBER*	Y DIRECTION DEFLECTION MAX ERROR	MIN ERROR	AVERAGE ERROR	NUMBER*
A	26	1.699	-0.693	-0.012	0	0.000	0.000	0.000	0
B	51	1.460	-0.627	-0.133	0	0.000	0.000	0.000	0
C	76	1.418	-0.628	-0.159	0	0.000	0.000	0.000	0
D	56	1.430	-0.629	-0.097	0	0.000	0.000	0.000	0
E	46	1.479	-0.715	0.054	0	0.000	0.000	0.000	0
F	66	1.418	-0.629	-0.057	0	0.000	0.000	0.000	0

8 NODE SOLID ELEMENTS X AND Y DEFLECTION ALONG ANGLE = 45 DEGREES

MESH*	NUMBER OF NODES	X DIRECTION DEFLECTION MAX ERROR	MIN ERROR	AVERAGE ERROR	NUMBER*	Y DIRECTION DEFLECTION MAX ERROR	MIN ERROR	AVERAGE ERROR	NUMBER*
A	26	0.428	-0.825	-0.495	0	1.894	-3.350	-1.814	19
B	51	0.445	-1.073	-0.646	0	1.947	-3.762	-1.979	27
C	76	0.449	-1.133	-0.678	0	1.957	-3.859	-2.013	40
D	56	0.445	-1.120	-0.695	0	1.949	-3.887	-2.146	32
E	46	0.430	-1.068	-0.740	0	1.903	-4.009	-2.629	39
F	66	0.445	-1.136	-0.744	0	1.949	-3.934	-2.323	43

8 NODE SOLID ELEMENTS X AND Y DEFLECTION ALONG ANGLE = 90 DEGREES

MESH*	NUMBER OF NODES	X DIRECTION DEFLECTION MAX ERROR	MIN ERROR	AVERAGE ERROR	NUMBER*	Y DIRECTION DEFLECTION MAX ERROR	MIN ERROR	AVERAGE ERROR	NUMBER*
A	26	0.000	0.000	0.000	0	4.722	-1.635	0.022	2
B	51	0.000	0.000	0.000	0	4.610	-1.507	-0.104	3
C	76	0.000	0.000	0.000	0	4.611	-1.508	-0.133	4
D	56	0.000	0.000	0.000	0	4.598	-1.512	0.007	4
E	46	0.000	0.000	0.000	0	4.533	-1.693	0.271	4
F	66	0.000	0.000	0.000	0	4.593	-1.515	0.128	5

8 NODE SOLID ELEMENTS X AND Y DEFLECTION AROUND THE CIRCULAR HOLE

MESH*	NUMBER OF NODES	X DIRECTION DEFLECTION MAX	MIN	AVERAGE	NUMBER*	Y DIRECTION DEFLECTION MAX	MIN	AVERAGE	NUMBER*
A	32	1.699	-0.790	0.176	0	4.722	-2.743	0.310	10
B	32	1.459	-1.473	-0.305	0	4.610	-4.279	-0.660	14
C	32	1.418	-1.585	-0.399	0	4.610	-4.521	-0.849	10
D	32	1.430	-1.573	-0.388	0	4.598	-4.537	-0.863	10
E	32	1.479	-1.522	-0.342	0	4.533	-4.615	-0.933	10
F	32	1.418	-1.632	-0.417	0	4.593	-4.702	-0.931	10

MESH*: NUMBER OF ELEMENTS EVERY 45 DEGREES
NUMBER*: NUMBER OF NODES WHICH HAVE AN ERROR GREATER THAN 2%

TABLE 12 - PART 2 - 20 NODE SOLID - DEFLECTION

20 NODE SOLID ELEMENTS X AND Y DEFLECTION ALONG ANGLE = 0 DEGREES

MESH*	NUMBER OF NODES	X DIRECTION DEFLECTION MAX ERROR	MIN ERROR	AVERAGE ERROR	NUMBER*	Y DIRECTION DEFLECTION MAX ERROR	MIN ERROR	AVERAGE ERROR	NUMBER*
A	26	0.267	-0.686	-0.551	0	0.000	0.000	0.000	0
B	51	0.244	-0.688	-0.567	0	0.000	0.000	0.000	0
C	76	0.232	-0.691	-0.571	0	0.000	0.000	0.000	0
D	56	0.232	-0.688	-0.542	0	0.000	0.000	0.000	0
E	46	0.234	-0.687	-0.504	0	0.000	0.000	0.000	0
F	66	0.231	-0.688	-0.526	0	0.000	0.000	0.000	0

20 NODE SOLID ELEMENTS X AND Y DEFLECTION ALONG ANGLE = 45 DEGREES

MESH*	NUMBER OF NODES	X DIRECTION DEFLECTION MAX ERROR	MIN ERROR	AVERAGE ERROR	NUMBER*	Y DIRECTION DEFLECTION MAX ERROR	MIN ERROR	AVERAGE ERROR	NUMBER*
A	26	0.438	-1.805	-0.708	0	1.943	-4.954	-2.016	12
B	51	0.437	-1.821	-0.714	0	1.940	-5.090	-2.027	23
C	76	0.436	-1.824	-0.715	0	1.939	-5.084	-2.033	34
D	56	0.437	-1.824	-0.765	0	1.940	-5.084	-2.212	28
E	46	0.438	-1.821	-0.851	0	1.943	-5.091	-2.554	32
F	66	0.437	-1.825	-0.807	0	1.940	-5.121	-2.368	38

20 NODE SOLID ELEMENTS X AND Y DEFLECTION ALONG ANGLE = 90 DEGREES

MESH*	NUMBER OF NODES	X DIRECTION DEFLECTION MAX ERROR	MIN ERROR	AVERAGE ERROR	NUMBER*	Y DIRECTION DEFLECTION MAX ERROR	MIN ERROR	AVERAGE ERROR	NUMBER*
A	26	0.000	0.000	0.000	0	1.266	-1.684	-1.209	0
B	51	0.000	0.000	0.000	0	1.220	-1.685	-1.245	0
C	76	0.000	0.000	0.000	0	1.176	-1.687	-1.257	0
D	56	0.000	0.000	0.000	0	1.175	-1.685	-1.168	0
E	46	0.000	0.000	0.000	0	1.170	-1.686	-1.049	0
F	66	0.000	0.000	0.000	0	1.178	-1.685	-1.115	0

20 NODE SOLID ELEMENTS X AND Y DEFLECTION AROUND THE CIRCULAR HOLE

MESH*	NUMBER OF NODES	X DIRECTION DEFLECTION MAX ERROR	MIN ERROR	AVERAGE ERROR	NUMBER*	Y DIRECTION DEFLECTION MAX ERROR	MIN ERROR	AVERAGE ERROR	NUMBER*
A	32	0.268	-3.701	-1.562	12	1.266	-10.663	-4.570	21
B	32	0.244	-3.709	-1.569	12	1.220	-10.648	-4.568	21
C	32	0.232	-3.679	-1.561	12	1.176	-10.558	-4.540	21
D	32	0.232	-3.679	-1.561	12	1.175	-10.558	-4.540	21
E	32	0.234	-3.676	-1.559	12	1.170	-10.565	-4.546	21
F	32	0.231	-3.663	-1.561	12	1.178	-10.520	-4.541	21

TABLE 13 - PART 2 - 8 NODE SHELL - MAXIMUM PRINCIPAL STRESS

8 NODE SHELL MAXIMUM PRINCIPAL STRESS ALONG ANGLE = 0.

MESH*	NUMBER OF NODES	STRESS*	MAXIMUM NODAL STRESS MAX ERROR	MIN ERROR	AVERAGE ERROR	NUMBER*	AVERAGE NODAL STRESS MAX ERROR	MIN ERROR	AVERAGE ERROR	NUMBER*	MINIMUM NODAL STRESS MAX ERROR	MIN ERROR	AVERAGE ERROR	NUMBER*
A	51	5	4.178	-1.893	-0.029	3	4.178	-1.188	0.004	3	4.178	-0.997	0.035	3
B	101	9	5.032	-1.113	0.061	7	5.032	-0.968	0.081	7	5.032	-0.966	0.099	7
C	151	14	4.336	-0.968	0.017	9	4.744	-0.965	0.054	9	5.152	-0.965	0.089	9
D	111	14	4.337	-1.113	0.146	9	4.746	-0.968	0.177	9	5.153	-0.966	0.205	9
E	91	14	4.331	-1.893	0.425	9	4.739	-1.188	0.476	9	5.147	-0.997	0.524	9
F	131	18	4.453	-1.113	0.320	13	4.461	-0.968	0.352	14	4.605	-0.966	0.381	15

8 NODE SHELL MAXIMUM PRINCIPAL STRESS ALONG ANGLE = 45.

MESH*	NUMBER OF NODES	STRESS*	MAXIMUM NODAL STRESS MAX ERROR	MIN ERROR	AVERAGE ERROR	NUMBER*	AVERAGE NODAL STRESS MAX ERROR	MIN ERROR	AVERAGE ERROR	NUMBER*	MINIMUM NODAL STRESS MAX ERROR	MIN ERROR	AVERAGE ERROR	NUMBER*
A	51	0	0.131	-4.831	-1.019	2	0.474	-2.506	-0.807	1	1.371	-1.610	-0.628	0
B	101	0	0.077	-1.635	-0.948	0	0.079	-1.179	-0.805	0	0.159	-0.993	-0.667	0
C	151	0	0.072	-1.559	-0.945	0	0.079	-1.207	-0.807	0	0.290	-1.053	-0.659	0
D	111	0	0.077	-1.563	-0.965	0	0.079	-1.191	-0.814	0	0.290	-0.993	-0.656	0
E	91	0	0.076	-1.558	-1.072	0	0.086	-1.205	-0.886	0	0.288	-1.051	-0.688	0
F	131	0	0.077	-1.507	-1.008	0	0.079	-1.206	-0.838	0	1.064	-1.053	-0.665	0

8 NODE SHELL MAXIMUM PRINCIPAL STRESS ALONG ANGLE = 90.

MESH*	NUMBER OF NODES	STRESS*	MAXIMUM NODAL STRESS MAX ERROR	MIN ERROR	AVERAGE ERROR	NUMBER*	AVERAGE NODAL STRESS MAX ERROR	MIN ERROR	AVERAGE ERROR	NUMBER*	MINIMUM NODAL STRESS MAX ERROR	MIN ERROR	AVERAGE ERROR	NUMBER*
A	51	0	0.778	-3.072	-0.613	2	0.779	-3.070	-0.587	2	1.063	-3.072	-0.561	2
B	101	0	0.722	-2.020	-0.648	1	0.722	-2.020	-0.642	1	0.722	-2.020	-0.637	1
C	151	0	0.727	-1.798	-0.656	0	0.727	-1.797	-0.650	0	0.727	-1.798	-0.644	0
D	111	0	0.722	-1.798	-0.699	0	0.722	-1.797	-0.693	0	0.722	-1.798	-0.688	0
E	91	0	0.701	-1.798	-0.757	0	0.701	-1.797	-0.749	0	0.701	-1.798	-0.743	0
F	131	0	0.722	-1.650	-0.729	0	0.722	-1.650	-0.724	0	0.722	-1.650	-0.720	0

8 NODE SHELL TANGENT PRINCIPAL STRESS AROUND THE CIRCULAR HOLE

MESH*	NUMBER OF NODES	STRESS*	MAXIMUM NODAL STRESS MAX ERROR	MIN ERROR	AVERAGE ERROR	NUMBER*	AVERAGE NODAL STRESS MAX ERROR	MIN ERROR	AVERAGE ERROR	NUMBER*	MINIMUM NODAL STRESS MAX ERROR	MIN ERROR	AVERAGE ERROR	NUMBER*
A	64	4	5.004	-6.714	0.526	32	5.004	-3.966	0.907	28	5.004	-2.437	1.283	24
B	64	4	2.840	-6.194	-0.332	14	4.137	-5.366	-0.120	14	5.382	-4.547	0.088	14
C	64	4	3.603	-7.113	-0.576	14	4.811	-6.487	-0.381	14	5.986	-5.896	-0.191	14
D	64	4	3.603	-7.113	-0.576	14	4.811	-6.487	-0.381	14	5.986	-5.897	-0.191	14
E	64	4	3.595	-7.111	-0.577	14	4.804	-6.484	-0.382	14	5.979	-5.894	-0.192	14
F	64	4	1.384	-8.324	-1.026	10	5.500	-6.456	-0.436	14	9.573	-4.600	0.150	14

MESH*: NUMBER OF ELEMENTS EVERY 45 DEGREES
STRESS*: NUMBER OF NODES WHERE THE EXACT STRESS IS LESS THAN 150 PSI. THESE NODES ARE IGNORED.
NUMBER*: NUMBER OF NODES WHICH HAVE AN ERROR GREATER THAN 2%

TABLE 14 - PART 2 - 8 NODE SOLID - MAXIMUM PRINCIPAL STRESS

8 NODE SOLID MAXIMUM PRINCIPAL STRESS ALONG ANGLE = 0.

MESH*	NUMBER OF NODES	STRESS*	MAXIMUM NODAL STRESS MAX ERROR	MIN ERROR	AVERAGE ERROR	NUMBER*	AVERAGE NODAL STRESS MAX ERROR	MIN ERROR	AVERAGE ERROR	NUMBER*	MINIMUM NODAL STRESS MAX ERROR	MIN ERROR	AVERAGE ERROR	NUMBER*
A	26	3	-0.538	-19.047	-4.297	15	17.159	-3.046	0.456	4	32.210	-0.798	3.198	6
B	51	5	-0.603	-6.083	-2.525	25	27.538	-2.328	0.773	7	30.508	-0.998	1.703	9
C	76	7	2.407	-3.048	-1.808	32	33.568	-1.996	0.919	10	29.923	-1.190	1.131	11
D	56	7	2.453	-4.517	-2.060	26	33.605	-2.321	1.658	10	29.968	-0.985	2.075	12
E	46	7	2.669	-5.320	-2.182	28	33.775	-3.009	2.578	11	30.171	-0.751	3.010	12
F	66	9	7.270	-3.748	-1.550	27	37.366	-2.319	2.241	14	30.077	-0.981	2.086	14

8 NODE SOLID MAXIMUM PRINCIPAL STRESS ALONG ANGLE = 45.

MESH*	NUMBER OF NODES	STRESS*	MAXIMUM NODAL STRESS MAX ERROR	MIN ERROR	AVERAGE ERROR	NUMBER*	AVERAGE NODAL STRESS MAX ERROR	MIN ERROR	AVERAGE ERROR	NUMBER*	MINIMUM NODAL STRESS MAX ERROR	MIN ERROR	AVERAGE ERROR	NUMBER*
A	26	0	0.085	-43.321	-4.682	13	3.972	-9.397	-1.179	2	39.194	-1.406	2.824	4
B	51	0	0.095	-41.589	-4.290	26	1.263	-3.848	-1.310	12	37.938	-1.948	1.896	7
C	76	0	0.095	-40.564	-4.131	40	0.501	-2.716	-1.388	21	37.552	-2.166	1.497	19
D	56	0	0.095	-40.540	-4.968	31	0.520	-2.660	-1.331	15	37.571	-1.954	2.510	10
E	46	0	0.085	-40.429	-5.857	33	0.605	-2.641	-1.464	18	37.662	-2.090	3.179	16
F	66	0	0.095	-40.472	-5.333	41	0.296	-2.774	-1.447	22	37.374	-2.155	2.600	21

8 NODE SOLID MAXIMUM PRINCIPAL STRESS ALONG ANGLE = 90.

MESH*	NUMBER OF NODES	STRESS*	MAXIMUM NODAL STRESS MAX ERROR	MIN ERROR	AVERAGE ERROR	NUMBER*	AVERAGE NODAL STRESS MAX ERROR	MIN ERROR	AVERAGE ERROR	NUMBER*	MINIMUM NODAL STRESS MAX ERROR	MIN ERROR	AVERAGE ERROR	NUMBER*
A	26	0	0.826	-6.674	-2.535	12	0.826	-5.677	-2.021	10	0.826	-4.973	-1.663	8
B	51	0	0.847	-6.963	-2.639	25	0.847	-6.374	-2.313	22	0.847	-5.966	-2.138	21
C	76	0	0.853	-7.003	-2.631	36	0.853	-6.540	-2.381	33	0.853	-6.262	-2.280	33
D	56	0	0.848	-6.992	-2.944	30	0.848	-6.530	-2.622	26	0.848	-6.251	-2.473	26
E	46	0	0.831	-6.928	-3.638	32	0.831	-6.466	-3.240	30	0.831	-6.188	-3.063	28
F	66	0	0.848	-7.000	-3.242	39	0.848	-6.594	-2.940	36	0.848	-6.386	-2.830	35

8 NODE SOLID TANGENT PRINCIPAL STRESS AROUND THE CIRCULAR HOLE

MESH*	NUMBER OF NODES	STRESS*	MAXIMUM NODAL STRESS MAX ERROR	MIN ERROR	AVERAGE ERROR	NUMBER*	AVERAGE NODAL STRESS MAX ERROR	MIN ERROR	AVERAGE ERROR	NUMBER*	MINIMUM NODAL STRESS MAX ERROR	MIN ERROR	AVERAGE ERROR	NUMBER*
A	32	0	-0.518	-100.000	-36.357	28	0.104	-93.301	-16.683	24	35.605	-1.232	17.176	28
B	32	0	-2.037	-100.000	-37.166	32	-1.041	-43.571	-9.426	22	94.303	-3.568	27.373	32
C	32	0	-2.014	-100.000	-37.014	32	-0.550	-26.490	-6.664	18	100.000	-4.068	29.059	32
D	32	0	-2.002	-100.000	-37.014	32	-0.535	-26.418	-6.655	18	100.000	-4.085	29.058	32
E	32	0	-1.951	-100.000	-37.014	30	-0.468	-26.085	-6.616	14	100.000	-4.165	29.054	30
F	32	0	-1.907	-100.000	-36.972	30	-0.232	-17.966	-5.227	14	100.000	-4.151	29.643	30

TABLE 15 - PART 2 - 20 NODE SOLID - MAXIMUM PRINCIPAL STRESS

20 NODE SOLID MAXIMUM PRINCIPAL STRESS ALONG ANGLE = 0.

MESH*	NUMBER OF NODES	STRESS*	MAXIMUM NODAL STRESS MAX ERROR	MIN ERROR	AVERAGE ERROR	NUMBER*	AVERAGE NODAL STRESS MAX ERROR	MIN ERROR	AVERAGE ERROR	NUMBER*	MINIMUM NODAL STRESS MAX ERROR	MIN ERROR	AVERAGE ERROR	NUMBER*
A	26	3	-0.673	-3.623	-1.285	4	0.624	-1.447	-0.880	0	4.539	-1.129	-0.494	1
B	51	5	-0.647	-3.398	-1.175	7	-0.174	-1.811	-0.952	0	1.988	-1.455	-0.765	0
C	76	7	-0.650	-4.612	-1.198	11	-0.650	-2.528	-1.028	3	0.187	-1.849	-0.905	0
D	56	7	-0.647	-4.599	-1.321	10	-0.630	-2.519	-1.087	3	0.198	-1.840	-0.919	0
E	46	7	-0.672	-4.604	-1.594	12	-0.590	-2.524	-1.275	3	0.193	-1.845	-1.037	0
F	66	9	-0.647	-6.229	-1.480	14	-0.630	-2.688	-1.229	9	-0.614	-2.000	-1.059	0

20 NODE SOLID MAXIMUM PRINCIPAL STRESS ALONG ANGLE = 45.

MESH*	NUMBER OF NODES	STRESS*	MAXIMUM NODAL STRESS MAX ERROR	MIN ERROR	AVERAGE ERROR	NUMBER*	AVERAGE NODAL STRESS MAX ERROR	MIN ERROR	AVERAGE ERROR	NUMBER*	MINIMUM NODAL STRESS MAX ERROR	MIN ERROR	AVERAGE ERROR	NUMBER*
A	26	0	0.123	-9.140	-2.068	8	0.164	-3.575	-1.140	3	3.506	-1.000	-0.323	1
B	51	0	0.140	-7.436	-1.839	15	0.158	-2.060	-1.049	3	4.977	-1.029	-0.268	4
C	76	0	0.146	-7.985	-1.830	22	0.159	-2.093	-1.043	3	5.309	-1.031	-0.286	5
D	56	0	0.140	-7.984	-2.081	19	0.158	-2.094	-1.102	3	5.309	-1.029	-0.138	5
E	46	0	0.123	-7.979	-2.534	22	0.164	-2.089	-1.273	3	5.315	-1.027	-0.051	5
F	66	0	0.140	-8.084	-2.276	27	0.158	-2.100	-1.170	5	5.767	-1.031	-0.082	7

20 NODE SOLID MAXIMUM PRINCIPAL STRESS ALONG ANGLE = 90.

MESH*	NUMBER OF NODES	STRESS*	MAXIMUM NODAL STRESS MAX ERROR	MIN ERROR	AVERAGE ERROR	NUMBER*	AVERAGE NODAL STRESS MAX ERROR	MIN ERROR	AVERAGE ERROR	NUMBER*	MINIMUM NODAL STRESS MAX ERROR	MIN ERROR	AVERAGE ERROR	NUMBER*
A	26	0	3.418	-0.301	0.694	4	3.543	-0.210	0.786	4	4.268	-0.190	0.874	5
B	51	0	3.769	-0.245	0.744	8	3.948	-0.242	0.778	8	4.094	-0.239	0.807	9
C	76	0	3.891	-0.259	0.741	12	3.993	-0.257	0.768	12	4.127	-0.256	0.789	12
D	56	0	3.891	-0.245	0.935	12	3.993	-0.242	0.967	12	4.127	-0.239	0.992	12
E	46	0	3.895	-0.301	1.219	12	3.997	-0.210	1.262	12	4.130	-0.190	1.296	12
F	66	0	3.963	-0.245	1.069	15	4.025	-0.242	1.099	16	4.050	-0.239	1.120	16

20 NODE SOLID TANGENT PRINCIPAL STRESS AROUND THE CIRCULAR HOLE

MESH*	NUMBER OF NODES	STRESS*	MAXIMUM NODAL STRESS MAX ERROR	MIN ERROR	AVERAGE ERROR	NUMBER*	AVERAGE NODAL STRESS MAX ERROR	MIN ERROR	AVERAGE ERROR	NUMBER*	MINIMUM NODAL STRESS MAX ERROR	MIN ERROR	AVERAGE ERROR	NUMBER*
A	32	0	16.515	-47.628	-1.589	24	23.947	-29.188	2.815	24	31.345	-10.779	7.207	32
B	32	0	15.436	-52.527	-2.484	24	25.295	-27.087	3.536	24	35.100	-1.696	9.539	28
C	32	0	13.726	-57.483	-3.467	24	24.666	-28.027	3.444	28	35.586	1.360	10.340	28
D	32	0	13.723	-57.480	-3.467	24	24.664	-28.024	3.444	28	35.584	1.363	10.340	28
E	32	0	13.709	-57.458	-3.465	24	24.650	-28.001	3.446	28	35.570	1.386	10.342	28
F	32	0	14.270	-58.053	-3.514	24	25.850	-27.708	3.654	28	37.383	2.585	10.807	32

MESH*: NUMBER OF ELEMENTS EVERY 45 DEGREES
STRESS*: NUMBER OF NODES WHERE THE EXACT STRESS IS LESS THAN 150 PSI. THESE NODES ARE IGNORED.
NUMBER*: NUMBER OF NODES WHICH HAVE AN ERROR GREATER THAN 2%

TABLE 16 - PART 2 - 8 NODE SHELL - MINIMUM PRINCIPAL STRESS

8 NODE SHELL MINIMUM PRINCIPAL STRESS ALONG ANGLE = 0.

	NUMBER OF		-------MAXIMUM NODAL STRESS-------				-------AVERAGE NODAL STRESS------				-------MINIMUM NODAL STRESS--------			
			MAX	MIN	AVERAGE		MAX	MIN	AVERAGE		MAX	MIN	AVERAGE	
MESH*	NODES	STRESS*	ERROR	ERROR	ERROR	NUMBER*	ERROR	ERROR	ERROR	NUMBER*	ERROR	ERROR	ERROR	NUMBER*
A	51	47	1.356	-12.827	-5.757	2	1.458	-12.821	-5.029	2	4.314	-12.827	-4.319	3
B	101	93	-2.444	-11.104	-6.471	8	-2.444	-11.104	-6.337	8	-2.444	-11.104	-6.205	8
C	151	139	-3.564	-11.030	-6.747	12	-3.559	-11.029	-6.687	12	-3.564	-11.030	-6.629	12
D	111	99	-3.564	-11.029	-6.747	12	-3.559	-11.027	-6.686	12	-3.564	-11.029	-6.629	12
E	91	79	-3.564	-11.019	-6.743	12	-3.559	-11.018	-6.683	12	-3.564	-11.019	-6.626	12
F	131	115	-3.612	-10.916	-6.811	16	-3.610	-10.916	-6.791	16	-3.612	-10.916	-6.772	16

8 NODE SHELL MINIMUM PRINCIPAL STRESS ALONG ANGLE = 45.

	NUMBER OF		-------MAXIMUM NODAL STRESS-------				-------AVERAGE NODAL STRESS------				-------MINIMUM NODAL STRESS--------			
			MAX	MIN	AVERAGE		MAX	MIN	AVERAGE		MAX	MIN	AVERAGE	
MESH*	NODES	STRESS*	ERROR	ERROR	ERROR	NUMBER*	ERROR	ERROR	ERROR	NUMBER*	ERROR	ERROR	ERROR	NUMBER*
A	51	42	-4.775	-12.461	-7.897	9	-4.174	-9.556	-6.668	9	-3.575	-7.093	-5.415	9
B	101	83	-4.856	-8.685	-7.110	18	-4.153	-7.340	-6.064	18	-3.453	-6.737	-5.024	18
C	151	124	-5.718	-8.692	-7.209	27	-4.847	-7.388	-6.060	27	-3.815	-6.651	-4.837	27
D	111	86	-5.721	-8.663	-7.139	25	-4.849	-7.332	-5.982	25	-3.815	-6.727	-4.767	25
E	91	64	-5.714	-8.677	-7.201	27	-4.843	-7.372	-6.052	27	-3.810	-6.634	-4.829	27
F	131	98	-5.635	-8.706	-7.112	33	-4.796	-7.391	-5.984	33	-3.571	-6.647	-4.818	33

TABLE 17 - PART 2 - 8 NODE SOLID - MINIMUM PRINCIPAL STRESS

8 NODE SOLID MINIMUM PRINCIPAL STRESS ALONG ANGLE = 0.

	NUMBER OF		-------MAXIMUM NODAL STRESS-------				-------AVERAGE NODAL STRESS------				-------MINIMUM NODAL STRESS--------			
			MAX	MIN	AVERAGE		MAX	MIN	AVERAGE		MAX	MIN	AVERAGE	
MESH*	NODES	STRESS*	ERROR	ERROR	ERROR	NUMBER*	ERROR	ERROR	ERROR	NUMBER*	ERROR	ERROR	ERROR	NUMBER*
A	26	24	-0.518	-18.761	-9.640	1	0.104	-16.526	-8.211	1	-0.518	-18.369	-9.444	1
B	51	47	-3.568	-54.347	-24.149	4	-2.625	-40.009	-19.164	4	-3.568	-44.712	-20.881	4
C	76	70	-4.068	-67.160	-28.166	6	-2.970	-48.762	-22.536	6	-4.068	-57.645	-25.285	6
D	56	50	-4.085	-67.235	-28.206	6	-2.987	-48.849	-22.580	6	-4.085	-57.723	-25.326	6
E	46	40	-4.165	-67.561	-28.388	6	-3.067	-49.227	-22.777	6	-4.165	-58.059	-25.510	6
F	66	58	-4.151	-73.877	-30.145	8	-2.966	-53.609	-24.247	8	-4.151	-65.182	-27.599	8

8 NODE SOLID MINIMUM PRINCIPAL STRESS ALONG ANGLE = 45.

	NUMBER OF		-------MAXIMUM NODAL STRESS-------				-------AVERAGE NODAL STRESS------				-------MINIMUM NODAL STRESS--------			
			MAX	MIN	AVERAGE		MAX	MIN	AVERAGE		MAX	MIN	AVERAGE	
MESH*	NODES	STRESS*	ERROR	ERROR	ERROR	NUMBER*	ERROR	ERROR	ERROR	NUMBER*	ERROR	ERROR	ERROR	NUMBER*
A	26	21	-11.268	-28.685	-18.875	5	11.590	-6.081	0.447	4	28.942	19.408	23.076	5
B	51	42	-5.837	-26.317	-17.034	9	6.973	-7.499	-2.180	7	15.635	12.414	13.957	9
C	76	62	1.140	-25.637	-15.271	13	8.843	-8.123	-2.203	11	22.577	9.750	11.957	14
D	56	43	1.095	-26.336	-14.756	12	8.790	-7.501	-1.654	10	22.538	10.409	12.709	13
E	46	32	0.911	-25.991	-15.536	13	8.581	-8.511	-2.498	12	22.371	9.387	11.632	14
F	66	49	2.065	-25.718	-14.890	17	7.391	-8.189	-2.559	13	15.864	9.065	10.461	17

TABLE 18 - PART 2 - 20 NODE SOLID - MINIMUM PRINCIPAL STRESS

20 NODE SOLID MINIMUM PRINCIPAL STRESS ALONG ANGLE = 0.

	NUMBER OF		-------MAXIMUM NODAL STRESS-------				-------AVERAGE NODAL STRESS------				-------MINIMUM NODAL STRESS--------			
			MAX	MIN	AVERAGE		MAX	MIN	AVERAGE		MAX	MIN	AVERAGE	
MESH*	NODES	STRESS*	ERROR	ERROR	ERROR	NUMBER*	ERROR	ERROR	ERROR	NUMBER*	ERROR	ERROR	ERROR	NUMBER*
A	26	24	22.163	13.357	17.760	2	26.200	13.[illegible]	19.787	2	29.452	13.357	21.405	2
B	51	47	35.883	13.254	23.464	4	37.951	13.[illegible]	24.544	4	38.121	13.254	24.822	4
C	76	70	41.362	12.403	25.177	6	43.273	12.[illegible]	26.109	6	42.983	12.403	26.072	6
D	56	50	41.356	12.402	25.174	6	43.267	12.[illegible]	26.106	6	42.976	12.402	26.069	6
E	46	40	41.331	12.395	25.159	6	43.241	12.402	26.091	6	42.951	12.395	26.055	6
F	66	58	43.138	12.822	25.984	8	44.[illegible]	12.832	26.802	8	44.082	12.822	26.562	8

20 NODE SOLID MINIMUM PRINCIPAL STRESS ALONG ANGLE = 45.

	NUMBER OF		-------MAXIMUM NODAL STRESS-------				-------AVERAGE NODAL STRESS------				-------MINIMUM NODAL STRESS--------			
			MAX	MIN	AVERAGE		MAX	MIN	AVERAGE		MAX	MIN	AVERAGE	
MESH*	NODES	STRESS*	ERROR	ERROR	ERROR	NUMBER*	ERROR	ERROR	ERROR	NUMBER*	ERROR	ERROR	ERROR	NUMBER*
A	26	21	-13.369	-36.145	-21.547	5	-7.212	-8.075	-7.544	5	17.187	-2.228	5.570	4
B	51	42	-14.043	-31.485	-19.931	9	-6.664	-8.420	-7.733	9	18.294	-3.056	4.494	7
C	76	62	-14.659	-36.374	-21.574	14	-5.987	-8.8[illegible]	-7.920	14	24.635	-3.220	5.512	11
D	56	43	-14.038	-36.374	-21.926	13	-5.990	-8.6[illegible]	-7.814	13	24.631	-3.055	6.158	10
E	46	32	-14.680	-36.390	-21.592	14	-6.004	-8.838	-7.938	14	24.618	-3.241	5.495	11
F	66	49	-14.709	-35.709	-21.629	17	-6.195	-8.818	-8.054	17	23.356	-3.188	5.338	12

MESH*: NUMBER OF ELEMENTS EVERY 45 DEGREES
STRESS*: NUMBER OF NODES WHERE THE EXACT STRESS IS LESS THAN 150 PSI. THESE NODES ARE IGNORED.
NUMBER*: NUMBER OF NODES WHICH HAVE AN ERROR GREATER THAN 2%