COMPUTER AIDED SHAPE OPTIMIZATION FOR ENGINEERING DESIGN WITH MSC/NASTRAN

Shenghua Zhang

The MacNeal-Schwendler Corporation
815 Colorado Blvd, Los Angeles, CA 90041

ABSTRACT

The goal of shape optimization is to find a best shape of a structural component so as to minimize an objective function subject to various design constraints including functional and manufacturing constraints. Version 68 in MSC/NASTRAN provides a tool to solve shape design problems systematically and automatically. This paper will first define the general shape optimization problem. Then, a new user interface to generate basis vectors is described. Through several example problems, the paper shows that the general shape optimization capability in MSC/NASTRAN can optimize complex shapes of two- and three dimensional engineering components.

COMPUTER AIDED SHAPE OPTIMIZATION FOR ENGINEERING DESIGN WITH MSC/NASTRAN

1. INTRODUCTION

Shape optimization involves determination of the shape of a structure so as to minimize an objective function subject to design constraints. In addition to constraints such as displacements, stresses, or natural frequencies, geometry-preserving constraints such as straight lines remaining straight, circles remaining circular are needed to satisfy functional and manufacturing requirements.

Shape optimization has been an active research area since 1973 when work in this area was initiated by Zienkiewicz and co-workers [1-2]. Recent advancement in design sensitivity analysis, finite element methods, geometric modeling and structural optimization techniques makes shape optimization a viable computer-aided design product [3-9].

A general shape optimization capability is being developed and will be available for Version 68 of MSC/NASTRAN. The purpose of this paper is to demonstrate certain features of this capability. First, the shape optimization problem is defined. Then, a new user interface to define basis vectors is described. Finally, several example problems are solved.

2. PROBLEM DEFINITION

Let $\underline{X} = [X_1, X_2, \cdots, X_{ndv}]$ where ndv is the number of design variables. A shape design problem is defined as finding a set of shape design variables $\underline{X}$ so as to

$$\text{minimize} \quad f(\underline{X}) \tag{1}$$

$$\text{subject to} \quad g_j(\underline{X}, u) \leq 0 \qquad j = 1, \cdots, m \tag{2}$$

$$X^L \leq X^i \leq X^U \qquad i = 1, \cdots, ndv \tag{3}$$

where f is an objective function, g_j are design constraint functions and u is the displacement (or other) response. Since f and g_j are often non-linear and implicit

functions of design variables, they are evaluated using finite element analysis. In MSC/NASTRAN, f and g_j can be defined either using direct responses from analysis solutions or using user-defined synthetic responses [10].

One key issue in shape optimization is to describe the continuous shape change with a finite number of design variables. The way to parameterize the shape affects the shape optimization process, such as design convergence, mesh distortion, and the final optimum shape. The next section will discuss the issue of shape parameterization.

3. SHAPE PARAMETERIZATION

In order to characterize the continuous shape change by a finite number of design variables, the reduced-basis method [11-12] has been implemented in MSC/NASTRAN in which a few of basis vectors are used to sufficiently describe shape changes of bodies having complicated geometries in two or three dimensions. Define $\underline{g}$ a shape vector which contains x-, y-, and z- coordinates of all grid points in a finite element model. Let $\underline{g}^o$ represent the initial shape and $\underline{g}^{new}$ the updated shape. Then the change in shape is parameterized as

$$\underline{g}^{new} = \underline{g}^o + \sum_{i=1}^{ndv} X_i \cdot \underline{T}^i + \underline{Q} \tag{4}$$

where $\underline{T}^i$ is the i-th basis vector. Basis vectors establish a direct relationship between the change in design variables and the change in grid point locations. The vector $\underline{Q}$ is a constant off-set vector which ensures $\underline{g}^{new} = \underline{g}^o$ when $\underline{X} = \underline{X}^o$. From Eq.(4), one sees that the i-th basis vector is the grid sensitivity with respect to the i-th shape design variable:

$$\underline{T}^i = \frac{d\underline{g}^{new}}{dX_i} \tag{5}$$

Eq.(4) states that the shape at any design cycle, including the final optimum shape, is a linear combination of basis vectors. Inappropriate selection of basis vector may yield an unacceptable design [9]. Therefore, it is important to generate effective and satisfactory basis vectors in shape optimization.

4. NEW USER INTERFACE FOR GENERATION OF BASIS VECTORS

In Version 67 of MSC/NASTRAN, basis vectors are generated through DVGRID bulk data entries. Each DVGRID bulk data entry relates the change in a shape design variable to the change in the location of a particular grid point. When a design problem is modeled with hundreds of grid points, a large number of DVGRID bulk data entries are required to define basis vectors which are less efficient and prone to errors.

A more efficient and user-friendly interface has been implemented which allows for direct input of basis vectors. It is based on the natural (deformation-based) approach which generates basis vectors through a set of displacements [5]. To illustrate the concept, a culvert problem is used here. The primary (original) structure of a culvert (half-symmetry) is shown in Fig.1a. It is desired to change the shape of the initially circular hole so as to minimize the volume of structure while limiting von-Mises stress on each element.

An auxiliary (dummy) structure is created as shown in Fig.1b which has the same topology as the primary structure but has different boundary and loading conditions. Different material properties can also be used. Outside edges of the auxiliary structure are fixed to maintain straight edge requirements. Additional six CBAR elements are added on the boundary to maintain smoothness of the shape change.

The motion along the y-direction of grid point 1 is selected as a shape design variable. To relate the change in the shape design variable to the change in the interior grid point locations, a point load (or enforced displacement) is applied as shown in load case 1 of Fig.2. The resulting static deformations are defined as a basis vector ($\underline{T}^1$ in Fig.3). Similarly, basis vectors $\underline{T}^2$ through $\underline{T}^4$ are generated by corresponding load cases in Fig.2.

The auxiliary finite element analysis is performed in a separate run and these displacements are stored as a matrix in the MSC/NASTRAN database. Then, in the current run, they are retrieved by the DBLOCATE statement in the file management section (FMS). A DVSHAP bulk data entry is provided to relate a shape design variable to one or more columns of the retrieved displacement matrix. In addition, DVGRID bulk data entries can also be integrated with these basis vectors.

Once basis vectors are generated, a user can display or plot them using MSC/XL or NASPLOT. This is an indispensable stage in shape optimization where a user can use

an interactive graphic tool to visualize basis vectors and infuse one's understanding of the problem physics and engineering judgement into the design process.

It should be noted that since basis vectors are generated in a separate run, they are not updated during the design process although the geomtry of the primary structure is updated iteratively. A more automated user interface is being developed in MSC/NASTRAN V68 which allows for generating basis vectors by incorporating the auxiliary model in the same optimization run [13-14]. Thus, basis vectors can be updated iteratively.

5. EXAMPLE PROBLEMS

Three example problems obtained from literature are presented. Basis vectors are generated using the implemented user interface. MSC/XL is used to visualize basis vectors and final shapes.

5.1 Culvert Problem

The culvert problem has been shown in Fig.1a and it is obtained from Ref.[15]. Seven basis vectors are generated by an auxiliary analysis have been stored in the database (four of them are shown in Fig.3). Then, these basis vectors are retrieved in the current run. Required FMS statements and one of DVSHAP bulk data entries are listed below:

```
ASSIGN F1='culvert.MASTER'
DBLOCATE DATABLK=(UG,BGPDTS,EQEXINS,CSTMS), LOGICAL=F1

DVSHAP 1 1 1.0
```

After eight iterations, a minimum volume design is obtained with 19% reduction. The optimum shape is shown in Fig.4. The volume history and the maximum constraint value history are plotted in Fig.5. The result agrees well with that given in Ref.[15].

5.2 Skewed Plate Problem

This problem is obtained from Ref.[16] and its finite element model is shown in Fig.6. The middle hole is initially designed for certain functionality. To reduce the effect of stress concentration on the boundary of the hole, two outer holes are introduced. In addition, the thickness of the plate is also to be designed.

This is a mixed optimization problem with both property and shape as design variables. The design task is to determine the size and location of two outer holes and the thickness of the plate so as to minimize the maximum von-Mises stress on the boundary of the middle hole. It also requires that the initial weight of the plate be not changed during the design process. Both size and location of two holes are varied symmetrically.

To meet these design requirements, an auxiliary structure is created in which outside edges and the middle hole are fixed. The enforced displacements applied on the boundaries of two holes yield the basis vector as shown in Fig.7a. The effect of the basis vector is to vary the size of two holes. The second basis vector is generated with a rigid element (RBE2) which connects all grid points on each hole. For example, the new location of the upper hole is controlled by the motion of grid point 1. The corresponding basis vector is given in Fig.7b.

The objective function is defined as the summation of von-Mises stresses of elements near the middle hole. In addition to the weight constraint, two geometry constraints are defined for the size of two outer holes: the maximum size of two holes are 23 mm. The problems converges after four design cycles. The objective function has been reduced by 12%. The maximum von-Mises stress is reduced from 223 MPa to 193 MPa. Stress plots are shown in Figure 8 for both the initial and final structures. The constant weight constraint is satisfied.

Figure 9 plots the optimum shape of the skew plate. The diameter of two holes are increased from the initial value of 14 mm to the final value of 23 mm. The location of tow holes has be changed from $a = 29$ mm to $a = 35$ mm. The final thickness of the plate is increased from 6.0 mm to 6.9 mm.

5.3 Crimping Device Problem

A half-symmetry finite element model of the cable crimping device is shown in Fig.10a. The problem is reproduced from Ref.[8]. The external surface of the lower portion of the part is held by a fixture (hatched lines). A hydraulic cylinder exerts 5 tons of force as shown. The I-type stiffener on the back side is designed to increase the strength of the device. It is desired to minimize the weight of the part subject to element stress constraints. In addition, the maximum y-displacement of grid point 475 and the maximum x-displacement of grid point 483 are constrained. Further, it is required to preserve the shape of the cylindrical surfaces and of the beam stiffener.

The auxiliary structure for this 3-D part is shown in Fig.10b. Hatched lines represent the fixed boundary. The first shape design variable is the motion along z-direction of the side surface on the middle portion of the device and the second shape design variable is the y-motion of the top surface. Two basis vectors are shown in Fig.11. Smoothness of the changing surfaces is maintained by covering the part with plate elements. The optimum shape is shown in Fig.12 with 10 % weight reduction.

6. CONCLUSIONS

Certain features of the shape optimization capability in MSC/NASTRAN V68 are demonstrated. A new user interface to generate basis vectors is discussed. Through several example problems, it is shown that the general shape optimization capability in MSC/NASTRAN can optimize complex shapes of two- and three dimensional engineering components.

7. REFERENCES

[1] Zienkiewicz, O.C. and Campbell, J.C., " Shape Optimization and Sequential Programming," in *Optimal Structural Design*, Edited by R. H. Gallagher and O. C. Zienkiewicz, John Wiley and Sons, New York, 1973.

[2] Francavilla, A., Ramakrishnan, C.V. and Zienkiewicz, O.C., "Optimization of Shape to Minimize Stress Concentration," *Journal of Strain Analysis*, Vol.10, 63-70, 1975.

[3] Haftka, R.T. and Grandhi, R.V., "Structural Shape Optimization - a Survey," *Computer Methods in Applied Mechanics and Engineering*, Vol.57, 91-106, 1986.

[4] Bennett, J.A. and Botkin, M.E. (Eds), *The Optimum Shape,* Plenum Press, New York, 1986.

[5] Belegundu, A.D. and Rajan, S.D., "A Shape Optimization Approach based on Natural Design Variables and Shape Functions," *Computer Methods in Applied Mechanics and Engineering*, Vol. 66, 87-106, 1988.

[6] Kodiyalam, S., Vanderplaats, G.N. and Miura, H. "Structural Shape Optimization with MSC/NASTRAN", *Computers & Structures*, Vol. 40, No. 4, 821-829, 1991.

[7] Choi, K.K. and Chang, K.H., "Shape Design Sensitivity Analysis and What-If Workstation for Elastic Solids," *Proceedings of AIAA/ASME/ASCE/ASC 32nd Structures, Structural Dynamics and Materials Conference,* Paper 91-1206.

[8] King, R. and Thanedar, P., "Shape Optimization Using Adaptive High-order Finite Elements," *Proceedings of AIAA/ASME/ASCE/ASC 33rd Structures, Structural Dynamics and Materials Conference,* Paper 92-2437.

[9] Zhang, S. and Belegundu, A.D. "A Systematic Approach for Generating Velocity Fields in Shape Optimization", *Journal of Structural Optimization*, to appear.

[10] Moore, G.J., *MSC/NASTRAN Design Sensitivity and Shape Optimization User's Guide, Version 67,* The MacNeal-Schwendler Corporation, Los Angeles, CA, July 1992.

[11] Pickett, R.M.,Jr. and et al., "Automated Structural Synthesis Using reduced Number of Design Coordinates," *AIAA Journal*, 11(4), 484-494, 1973.

[12] Vanderplaats, G.N. *Numerical Optimization Techniques for Engineering Design with Applications,* McGraw-Hill, Inc., 1984.

[13] Chargin, M.C. and Raasch, I. "General Shape Optimization Capability", *Finite Elements in Analysis and Design,* Vol.7, N0.4, Feb. 1991.

[14] Patel, H., "Software Requirement Specification (SRS) for shape optimization boundary shapes," March 1993.

[15] Belegundu, A.D. and Rajan, S.D., "Shape Optimal Design Using Isoparametric Elements", *Proceedings of 29th AIAA/ASME/ASCE/AHS/ASC Structures, Dynamics, and Materials Conference*, 696-701, Williamsburg, VA, April 18-20, 1988.

[16] Aradhya, K.S.S. and et al., "Minimizing Stress Concentrations Around Circular Holes in Skewed Plates Subjected to Inplane Loading", presented in the *International Aerospace Congress,* Melbourne, Australia, May, 1991.

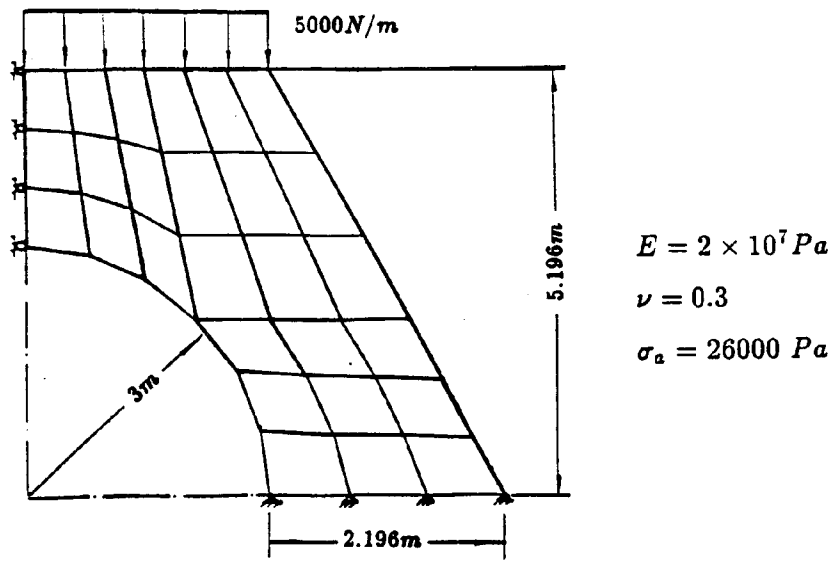

(a)

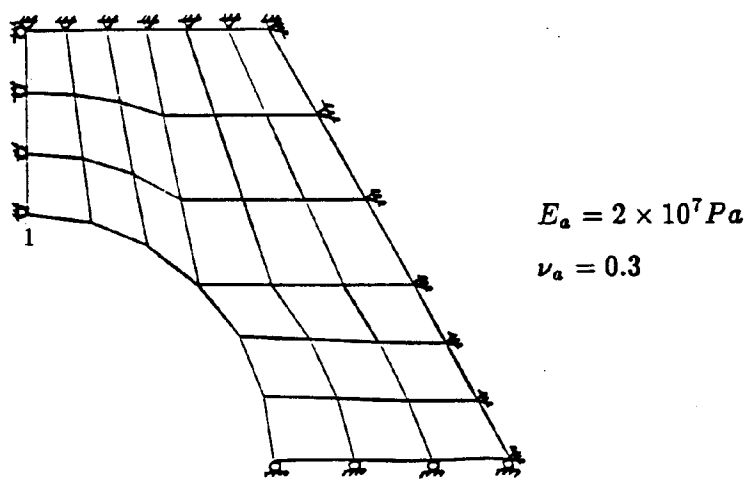

(b)

Figure 1. Culvert Problem: (a) Primary Structure, (b) Auxiliary Structure

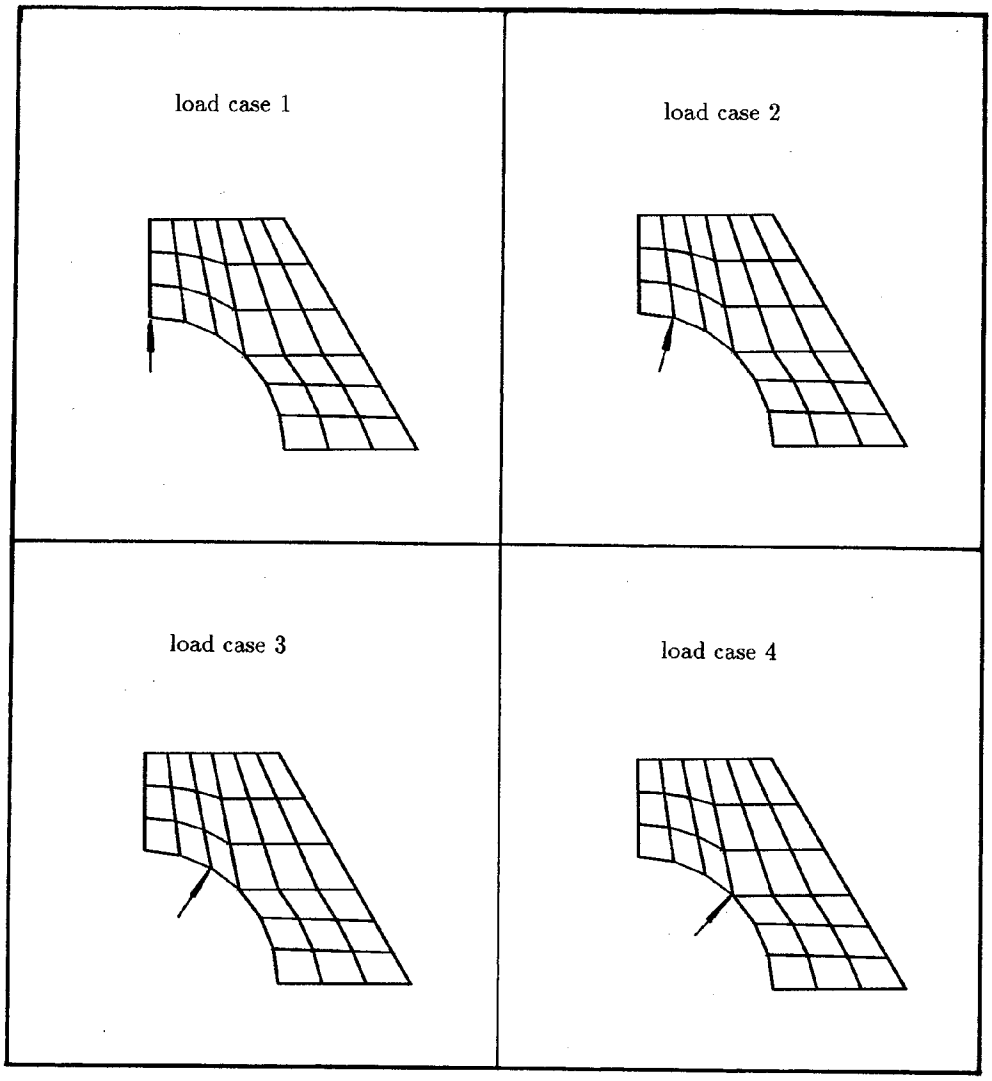

Figure 2. Load SUBCASE in Auxiliary Structure

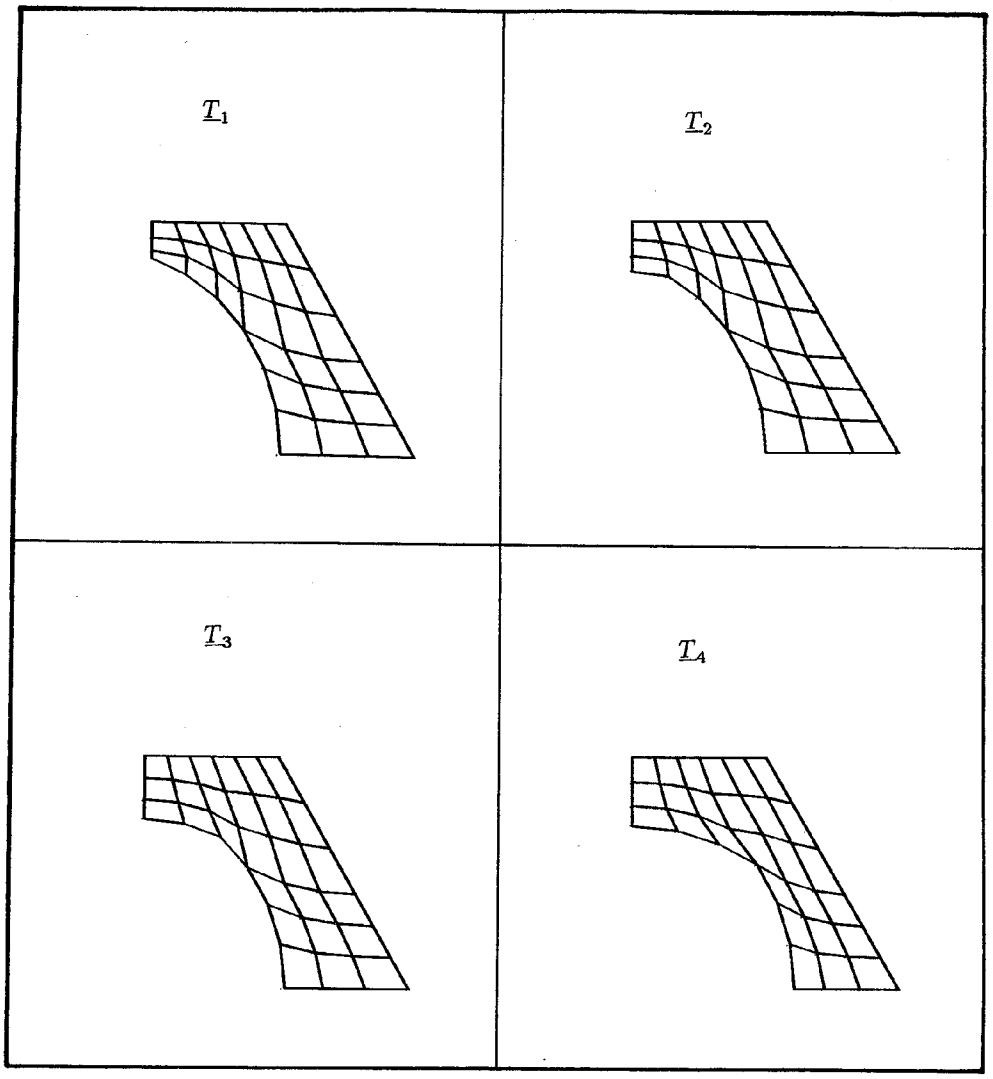

Figure 3. Basis Vectors Generated from Auxiliary Loads in Figure 2.

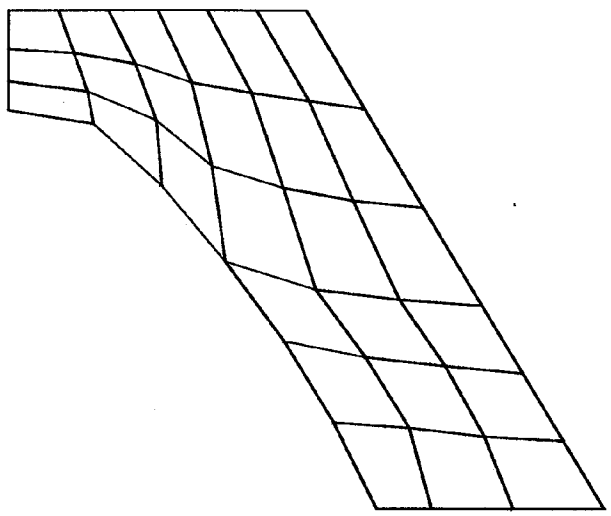

Figure 4. Optimum Shape of Culvert

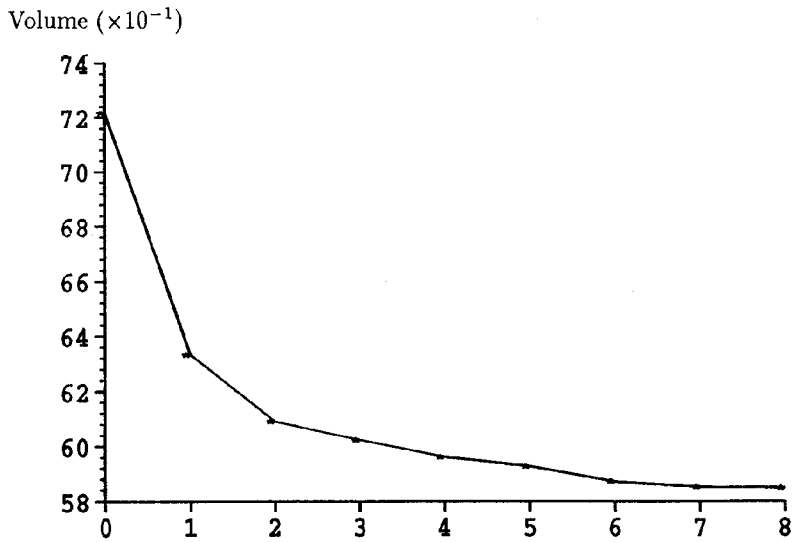

(a)

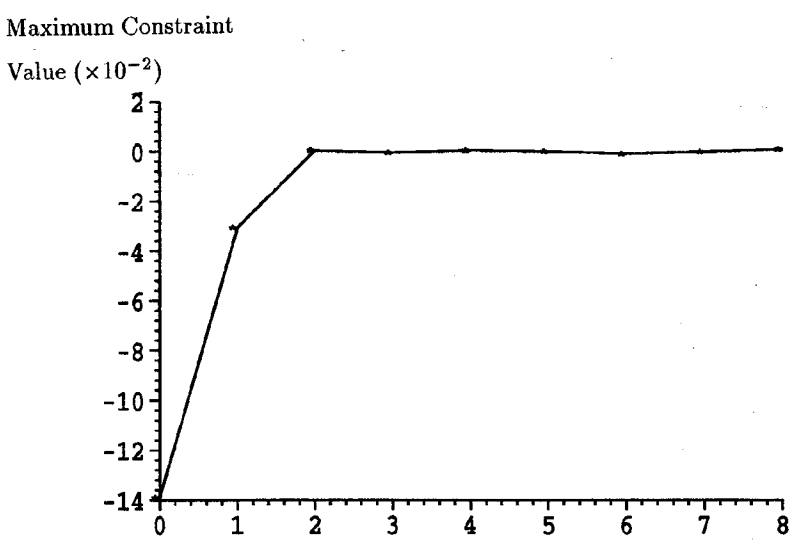

(b)

Figure 5. Design History Plots for the Culvert Problem:
(a) Volume, (b) Maximum Constraint Value

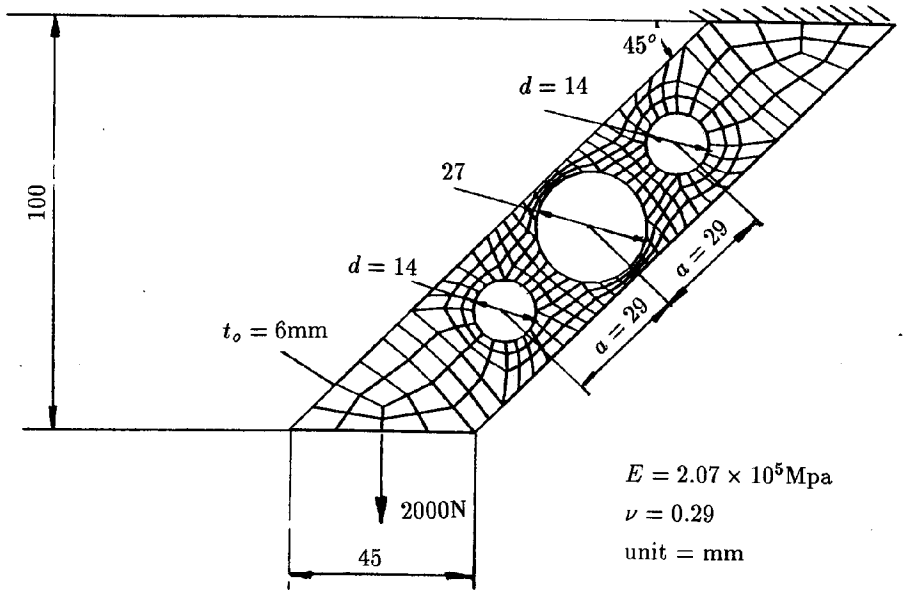

Figure 6. Primary Structure of A Skew Plate

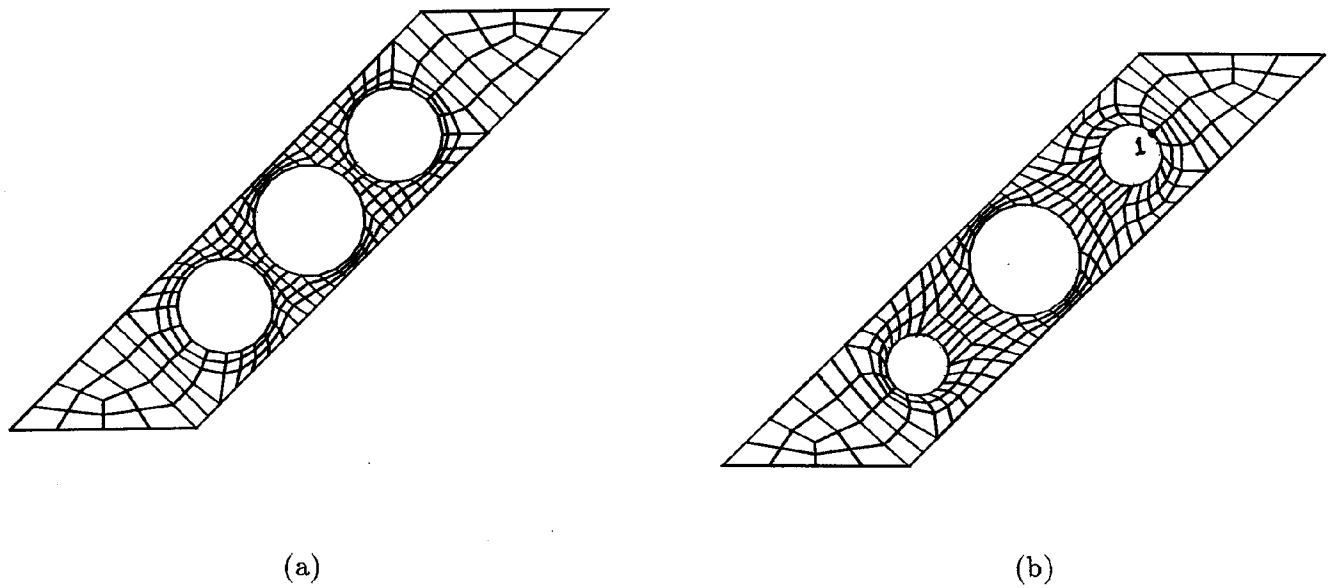

Figure 7. Basis Vectors for Skew Plate for (a) Size of Outer Holes, (b) Location of Outer Holes

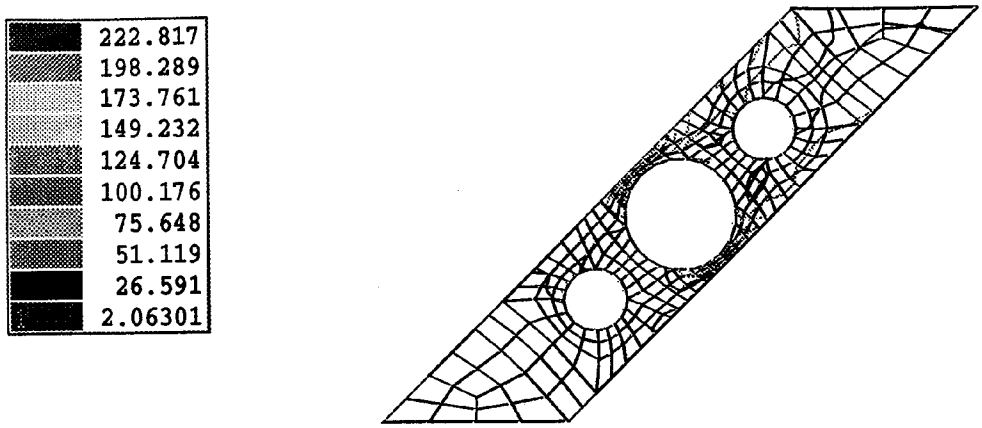

(a)

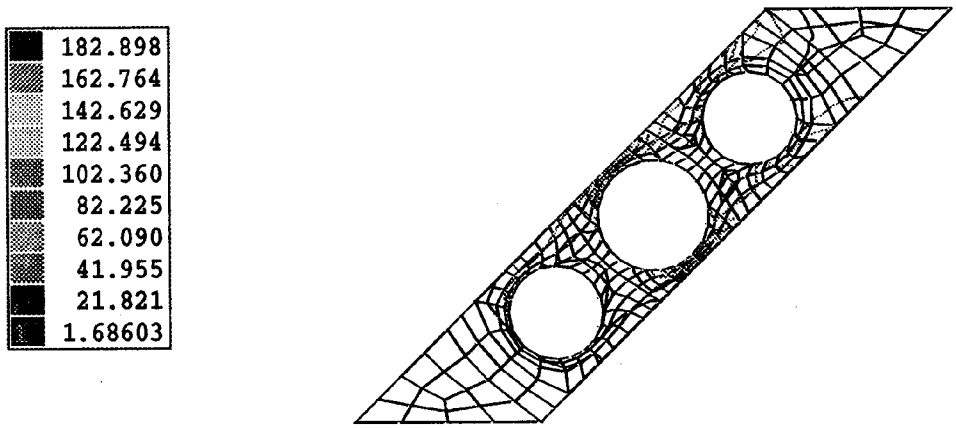

(b)

Figure 8. Stress Contour Plots for the Skew Plate:
(a) Initial Shape, (b) Optimum Shape

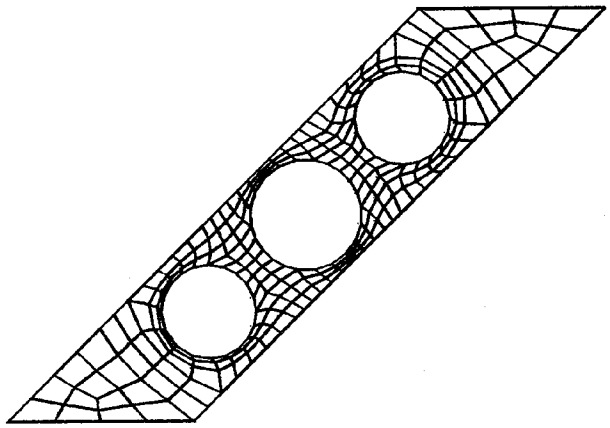

Figure 9. Optimum Shape of Skew Plate

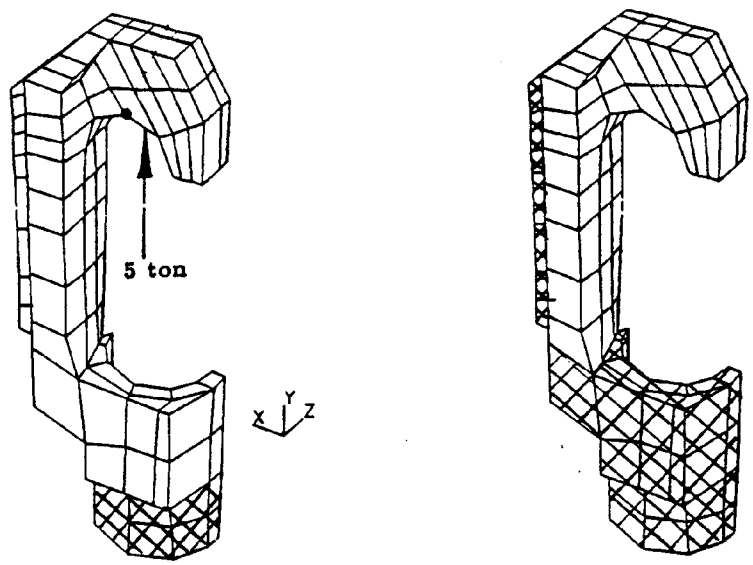

(a) (b)

$E = 2.07 \times 10^5\ MPa$

$\nu = 0.29$

$\sigma = 375\ MPa$

$E_a = 2.07 \times 10^5\ MPa$

$\nu_a = .29$

Figure 10. Cable Crimping Device: (a) Primary Structure, (b) Auxiliary Structure

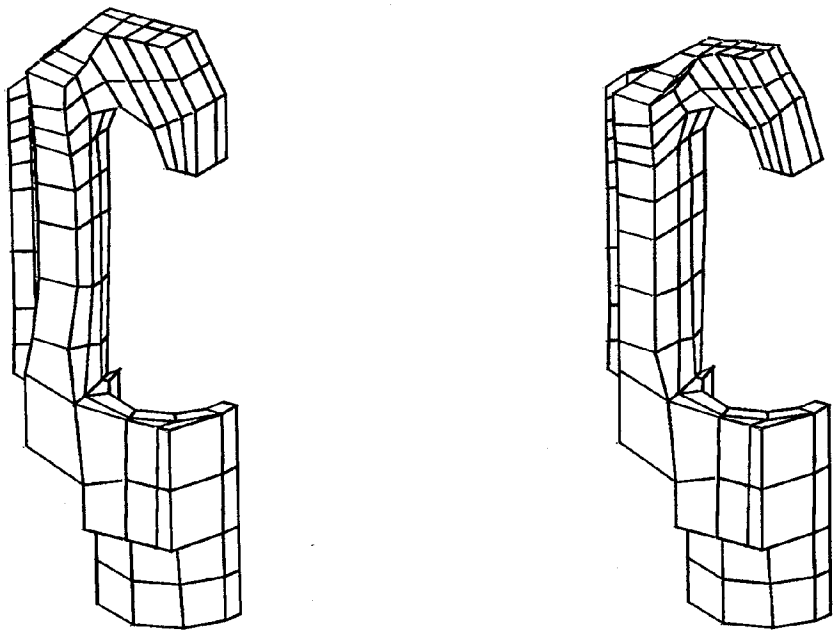

(a) (b)

Figure 11. Cable Crimping Device: (a) First Basis Vector, (b) Second Basis Vector

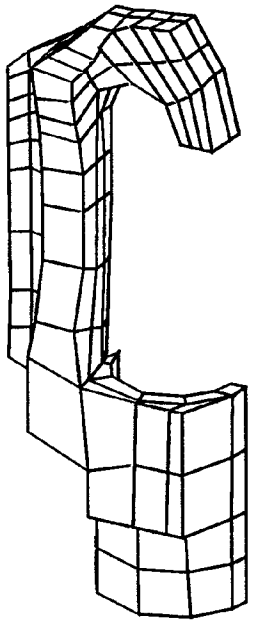

Figure 12. Optimum Shape of Cable Crimping Device