Procedure for FRF Model Tuning in MSC/NASTRAN

D.L. Carlson
S.A. Shipley
T.F. Yantis

Boeing Computer Services
P.O. Box 24346, MS 7L-22
Seattle, WA 98124

Abstract

Prediction of aircraft cabin noise relies on accurate frequency response analyses of engine, strut, nacelle, and wing components. Tuning the finite element model to accurately reflect the dynamic characteristics of the actual component hardware is an important part of this process. This paper discusses the development of a DMAP procedure for implementing Prof. David Ewins' approach to frequency response function (FRF) tuning in MSC/NASTRAN Version 67. Results are presented for simple test models which reveal some of the capabilities and limitations of the procedure.

Nomenclature

F	harmonic force vector
u	harmonic displacement vector
M,B,H,K	mass, viscous damping, structural damping, stiffness matrices
CA	compliance matrix - MSC/NASTRAN
CT	compliance matrix - Test
ZA	dynamic stiffness matrix - MSC/NASTRAN
ZT	dynamic stiffness matrix - Test
ΔC	compliance error
ΔZ	dynamic stiffness error
R	matrix relating compliance error and model error
p	model parameter error vector
S_{Mi}	mass sensitivity matrix for i-th parameter
S_{Bi}	viscous damping sensitivity matrix for i-th parameter
S_{Hi}	structural damping sensitivity matrix for i-th parameter
S_{Ki}	stiffness sensitivity matrix for i-th parameter
j	$\sqrt{-1}$
ω	frequency
g	number of degrees of freedom (dof) in the analysis model
l	number of test drive points
t	number of test measurement points
r	number of analysis dof without corresponding test dof; g - t
s	number of parameters used to tune the analysis model

Introduction

Approximately two years ago, The Boeing Company initiated research into methods to tune large MSC/NASTRAN finite element models of engine, struts and wings of commercial aircraft for the purpose of vibration and noise analysis. The problem is characterized by high frequency bandwidth (20-100 Hz) and high modal density, for which traditional modal analysis, test correlation, and update procedures have not always proven suitable. Finite element models (FEM) often did not satisfactorily match dynamic test data. Before these models can be used with confidence they must be correlated and tuned to match available test data.

In recent years, tuning of FEMs has been the subject of considerable research. A good review article on alterative procedures has been prepared by Imregun and Visser [6]. For dynamic models, these procedures fall into two broad categories: 1) those based on correlating and updating to match modal parameters such as frequency, mode shape, modal assurance criteria, etc., and 2) those based on correlating and updating to match frequency response functions (FRF) directly. In the first category, for example, are the procedures implemented in MSC/NASTRAN Version 66 by Blakely [1, 2, 3] and the MSC/NASTRAN sensitivity-based procedures of Flanigan [5]. In the second category are FRF-based

methods of Lin and Ewins [7], Miura and Chargin [11] and Conti and Donley [4].

Following technical interchange with Prof. David Ewins (Imperial College, UK) and Mr. Mladen Chargin and Dr. Hiuro Miura (NASA-Ames), it was decided that FRF-based procedures such as the Ewins method held the most promise of meeting our objectives. The advantages included bypassing the extraction of modal parameters from test data, direct use of the FRF's which preserve dynamic data outside the immediate frequency range of interest, and a robust solution algorithm for solving for model errors by a statistical (least squares) procedure.

In this paper our goal is to outline the Ewins' FRF tuning method and show how it was implemented in MSC/NASTRAN Version 67. To date our efforts have been limited to small finite element models with synthesized 'analytic' test errors, and limited application to real test data. Boeing's ultimate goal is to demonstrate the method on larger, more realistic structural models using test FRF data. We realize, of course, that formalized model tuning methods, including Ewins' FRF method, are in their infancy. If the FEM has major problems, e.g., missing elements, improper connectivities, or inadequate meshes, then automated tuning procedures are likely to fail. The MSC/NASTRAN FRF tuning method we have implemented is appropriate to tuning a FEM which is a 'reasonable' representation of the actual structure, by selective parameter adjustments of elemental mass, damping, and stiffness properties.

Mathematical Formulation

The mathematical basis is presented in detail by Ewins and his colleagues in References [7,12]. The derivation summarized in this section adopts a somewhat different nomenclature, more compatible with Boeing conventions and our MSC/NASTRAN implementation.

Starting with a global (g-size) finite element model and using direct frequency response, the following steady-state matrix equations result,

$$[-\omega^2 M + j\omega B + jH + K]\ \{u\} = \{F\}$$

or in terms of the g-size dynamic stiffness matrix [Z],

$$[Z]\ \{u\} = \{F\}$$

where,

$$[Z] = -\omega^2 [M] + j\omega [B] + j[H] + [K]$$

For specified harmonic forcing functions $\{F\}$, one solves for the harmonic displacements $\{u\}$ at a specified number of frequency points, ω_i, by inverting [Z] or forward/backward substitution,

$$\{u\} = [Z]^{-1}\{F\} = [C]\ \{F\}$$

where $[C]$ is the dynamic compliance (also called receptance) matrix. The $[C]$ matrix for the analytic finite element model can be computed by specifying unit applied harmonic loads, one at a time, and using the direct frequency response solution, SOL 108, for as many frequency points as desired. To distinguish the resulting analytic compliance matrix

from the measured test compliance, we hereafter denote it $[CA]$.

Suppose that one also has performed a harmonic shake test or impulse test on the real structure and has available test FRF data in the form of test compliance matrices $[CT]$. It is usually impractical to measure all coordinates (degrees of freedom) associated with the finite element model so that $[CT]$ is incomplete (not g-size). This incompleteness of the test compliance complicates the procedure, but ways have been found to approximate the (missing) test response functions as shown later. The task now becomes one of adjusting the finite element model parameters such that the analytic compliances $[CA]$ match the test compliances $[CT]$.

Ewins' FRF tuning algorithm can be derived starting with the simple identity

$$[CT]\ [ZT] = [I]$$

Replacing the unknown test dynamic stiffness $[ZT]$ by the analysis dynamic stiffness $[ZA]$ plus an unknown dynamic stiffness error $[\Delta Z]$ we get

$$[CT]\ [ZA + \Delta Z] = [I]$$

Post-multiplying both sides by $[CA]$, taking the transpose, rearranging terms, and taking advantage of symmetry,

$$[CA - CT] = [CA]\ [\Delta Z]\ [CT] \qquad \text{(EQ 1)}$$

EQ (1) is the basis of the Ewins algorithm, where the difference in the analysis and test compliances, which are known, can be expressed in terms of the product of analytic and test compliances and an unknown model dynamic stiffness error. Other than the assumption that the matrices are g-size, EQ (1) is exact and contains no other approximations or assumptions. Note also that EQ (1) is valid for each column of $[CT]$, considered one at a time.

The next step in the derivation is to expand the dynamic stiffness error in terms of mass, stiffness and damping matrix errors,

$$[\Delta Z] = -\omega^2 [\Delta M] + j\omega [\Delta B] + j [\Delta H] + [\Delta K] \qquad \text{(EQ 2)}$$

Substituting back into EQ (1) and taking the i-th column of the test compliance matrix for which there are a total of t columns,

$$\{CA_i - CT_i\} = [CA]\ [-\omega^2 \Delta M + j\omega \Delta B + j\Delta H + \Delta K]\ \{CT_i\} \qquad \text{(EQ 3)}$$

Note that in EQ (3) that the row dimension of $\{CT_i\}$ must be g-size, but we probably don't have measured test compliances at all these degrees of freedom. We are forced to make an approximation for the missing measurements and pursue an iterative strategy. One approach is simply to use rows of the analytic compliances, $\{CA_i\}$, for test compliances that are missing. Another is to expand the measured test compliances to unmeasured locations using a form of inverse Guyan reduction.

To take advantage of the sensitivity capability in MSC/NASTRAN we next expand the mass, damping and stiffness errors in terms of sensitivity matrices with respect to s unknown parameters $\{p\}$,

$$[\Delta M] = [S_{M1}]p_1 + [S_{M2}]p_2 + \ldots + [S_{Ms}]p_s$$

$$[\Delta B] = [S_{B1}]p_1 + [S_{B2}]p_2 + \ldots + [S_{Bs}]p_s$$

$$[\Delta H] = [S_{H1}]p_1 + [S_{H2}]p_2 + \ldots + [S_{Hs}]p_s$$

$$[\Delta K] = [S_{K1}]p_1 + [S_{K2}]p_2 + \ldots + [S_{Ks}]p_s$$

Substituting the above into EQ (3) and collecting terms produces the following set of equations,

$$\{CA_i(\omega) - CT_i(\omega)\} = \{\Delta C_i\} = [R(\omega)]\{p\} \qquad \text{(EQ 4)}$$

In implementing the method, rows of EQ (4) not corresponding to actual test coordinates are ignored, since the calculated errors at non-test locations would either be approximations or zero, depending on the method used to expand the test data.

EQ (4) must be solved iteratively because an approximation was introduced in forming $R(\omega)$. The question now arises whether, at each iteration, $R(\omega)$ is of sufficient rank to solve for $\{p\}$. Recall that EQ (4) was derived using one column of the test compliance matrix $\{CT_i\}$ at some frequency, ω. As necessary, the set of equations (row size) in EQ (4) can be expanded by selecting sufficient number of columns of the test compliance matrix and sufficient number of frequency points, resulting in an over- determined system of equations, such that the rank of $R(\omega)$ is sufficient to find the unknown parameters. EQ (4) can then be used to solve iteratively for $\{p\}$ by several algorithms such as QR or SVD.

MSC/NASTRAN Implementation

Figure 1 is a schematic illustrating the FRF tuning procedure implemented in MSC/NASTRAN Version 67. The procedure begins with a standard SOL 108 direct frequency response analysis in which compliances are generated for each frequency to be included in the calculation of the matrix R. This analysis has a unit loadcase for each test response degree of freedom. The full g-size compliance matrix is not required for the calculation of R or ΔC, since only rows in EQ(4) corresponding to test response points are considered. With unit loads, *CA* in Figure 1 is the same as *UP* in SOL 108.

After the data recovery step (SUPER3) in SOL 108, custom subDMAP FRFT is called to calculate the parameter error vector $\{p\}$. The test compliances in external order, *CTE* are read via INPUTT4. Two matrices present in the bulk data are required to insure that the test and analysis data are compatible. *RMAT*, which associates rows in *CTE* with rows in *CA*, is input via DMIG cards. It has one column for each test coordinate, each containing unity in the row position of the corresponding analysis degree of freedom. When *CTE* is pre-multiplied by *RMAT*, the rows are re-ordered and the matrix is expanded to g-size, with zeros in the non-test locations.

CMAT is input via DMI entries, and has one column for each analysis frequency and one row for each test frequency. It contains values of unity at locations which associate corresponding test and analysis frequencies that are to be included in the error vector calculations. Post-multiplying *CTE* by *CMAT* selects the desired colmns and reorders them to be compatible with *CA*.

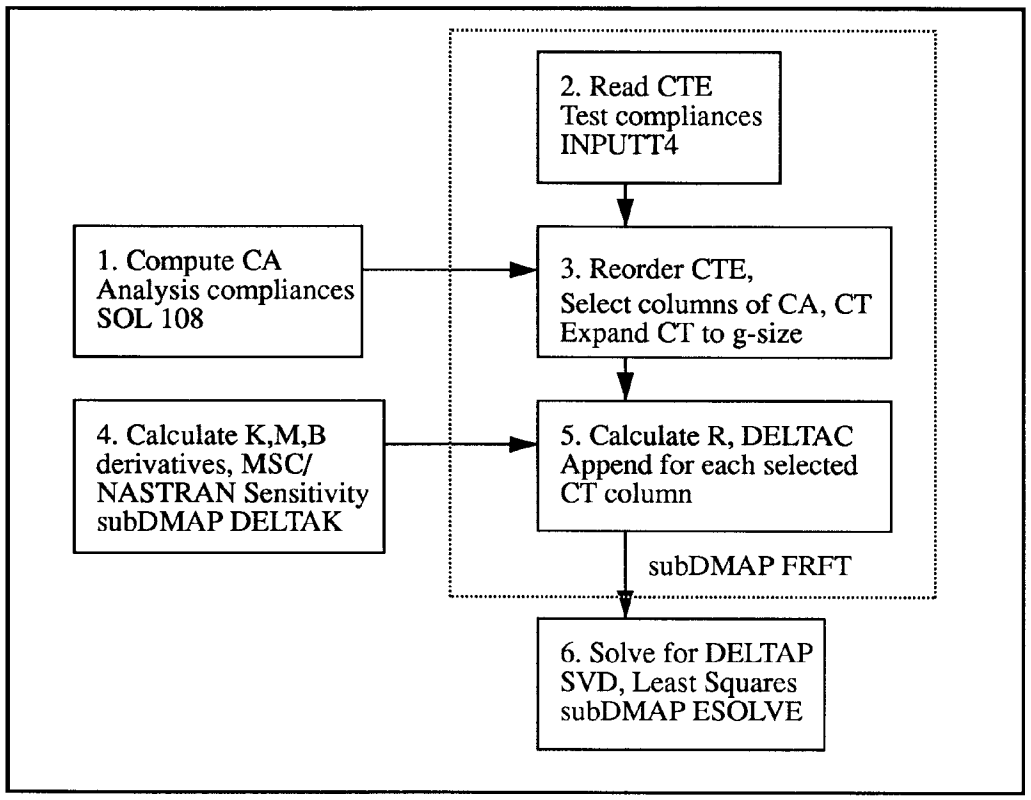

Figure 1 FRF Tuning Procedure

The resulting matrix, *CT*, contains zeros for all the non-test degrees of freedom, and must be updated to include estimates of test results at these locations. At the user's discretion, values of *CA* are used, or estimates are calculated using a form of inverse Guyan reduction. In the latter case, a transformation matrix G_{tl} is found by solving

$$[CA_{tt}]\ [G_{tl}] = [CT_{tl}]$$

for G_{tl} where the subscript t refers to the set of test response points, and l refers to the test drive points. CT_{rl} is then

$$[CT_{rl}] = [CA_{rt}]\ [G_{tl}]$$

where r refers to the non-test locations.

subDMAP DELTAK is called by FRFT to generate the sensitivities required to form $[R]$ in EQ (4). This procedure takes advantage of the MSC/NASTRAN sensitivity calculation capability. The 'old' capability, using DVAR, DVSET, etc. is used because of its ability to calculate sensitivities with respect to material properties. This is to insure that the sensitivities can be made linear with respect to the parameters $\{p\}$, as required for Ewins' method. Note that for Ewins' formulation, the sensitivities S_{ki}, for example, would be $\partial K/\partial p_i$. In order to get the module DSVG1 to calculate these instead of response sensitivities, a unit vector is supplied in place of a displacement vector, U_g.

With the sensitivities calculated and CT modified to include only the desired columns, each non-null column of CT is processed by FRFT, which generates rows of R (columns of R^T) and ΔC. Once computed, R and ΔC are passed to subDMAP ESOLVE, where the real and imaginary parts of the coefficients are separated. The imaginary parts are then added as additional equations, in effect doubling the number of real equations to be solved via SVD.

Currently, a SVD solution algorithm has been implemented via DMAP in subDMAP ESOLVE. A future version will involve user written modules for more efficient SVD calculations and an automatic iteration scheme.

FRF Tuning Numerical Examples

Prismatic Bar - Synthetic Test Error

In order to check out the FRF-tuning procedure in MSC/NASTRAN, a simple test case of a 25-node prismatic free-free bar was considered (Figure 2). The analysis model had uniform mass and stiffness properties; the 'test' model included the mass and stiffness variations shown in Figure 2. The test compliances were assumed to be available at 9 measurement locations along the bar. A comparison of typical analysis and test compliances are shown in Figure 3.

Density and Young's Modulus variations (ρ and E) for each of the 24 elements were considered to be parameters (a total of 48). The use of 9 compliance measurements (translations) at 6 equally-spaced frequency points was sufficient to achieve an R matrix rank of 48. The MSC/NATRAN tuning procedure successfully identified the model errors in approximately 14 iterations. Figure 4 shows the errors in density and elastic modulus at

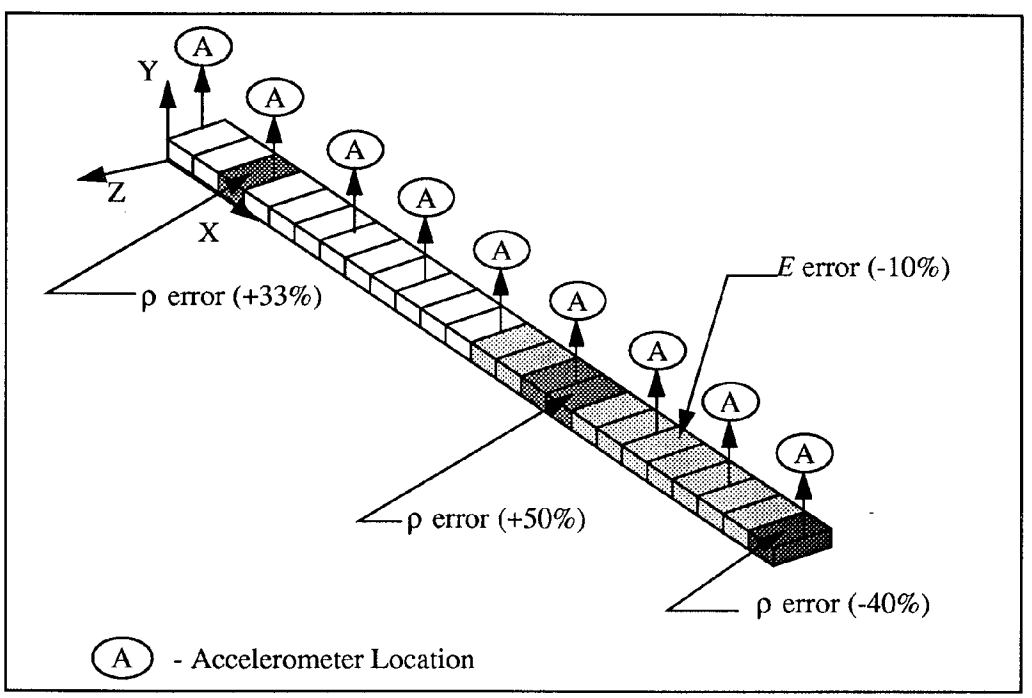

Figure 2 Prismatic Beam Model

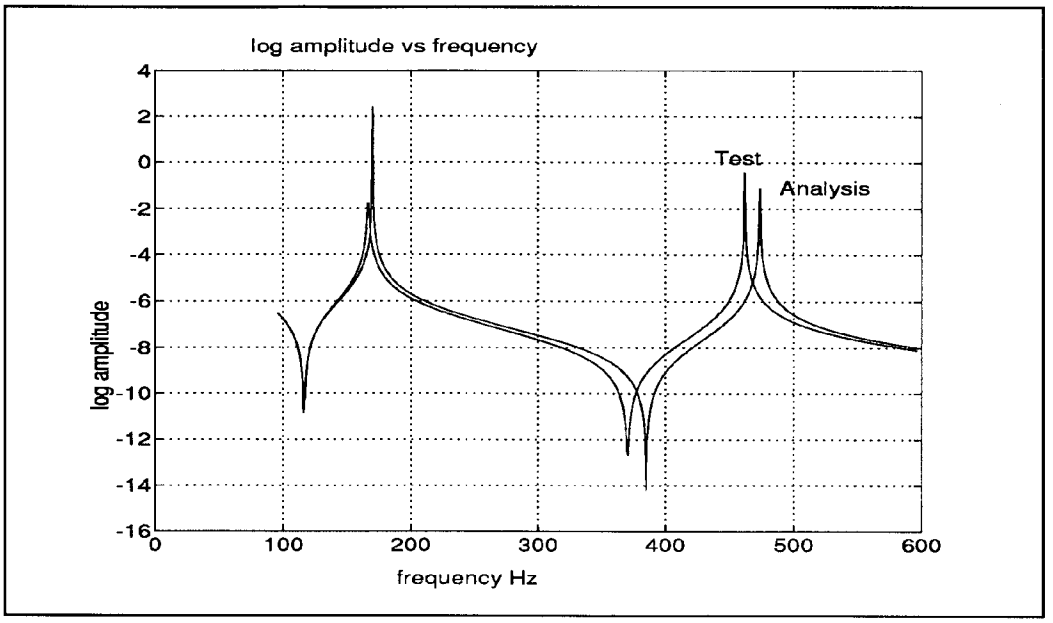

Figure 3 Prismatic Beam - Synthetic Test vs. Analysis FRF

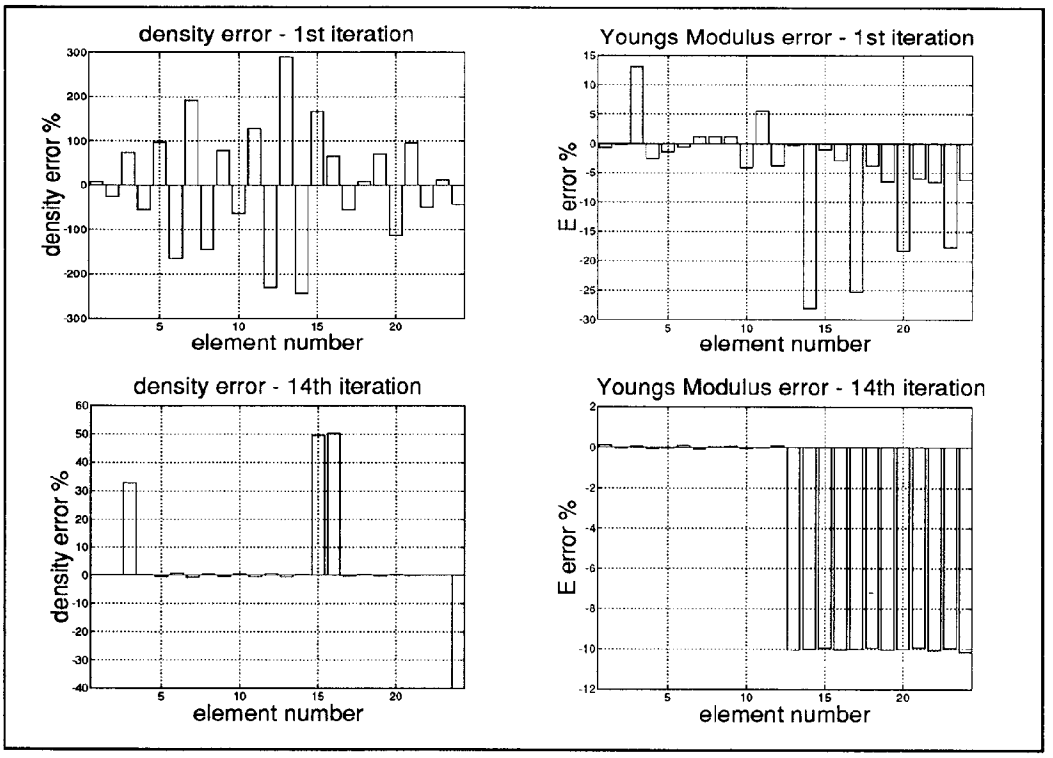

Figure 4 Prismatic Beam - Synthetic Test Data, Iteration History

the end of the first and fourteenth iterations. These are the differences between the initial parameter values and those at the end of the iteration. It is interesting that the analysis and test compliances were sampled at only 6 frequency points, none near resonances, but there was sufficient dynamic information captured to identify the unknown model errors. Increasing the number of sampled frequencies by as much as an order of magnitude did not greatly improve the convergence of the solution.

Further convergence studies were conducted on the effects of the magnitude of the model error, number of sensor locations, number of discrete frequencies, and proximity of measurement location to the model error. What is emerging from these studies is that there exist certain convergence criteria for obtaining a solution. For example, the number of test measurements required for convergence appears to depend on the magnitude of model error, proximity of measurement location to the model error, and number of frequency points selected. More formal definition of convergence criteria is the subject of ongoing research.

Prismatic Bar - Actual Test Data

Using synthetic test data to verify the FRF tuning procedure has the advantage of being convenient and inexpensive, and much can be learned from doing so. Using actual test data however, poses some additional challenges. For example, often it is not known if the FEM is capable of representing the FRF behavior faithfully, if the critical parameters have been selected for tuning, or even if the appropriate parameters have been included in the model. In addition, possible errors and noise in the test data must be dealt with. To address some of these issues, the same prismatic bar described above was considered with actual test data.

The test bar had 9 accelerometers as described above, and was subjected to an impulse load at one end. During the test, the bar was suspended on two soft foam pads, five inches from each end. FRF data from 0 Hz to 3200 Hz was collected.

Initially the bar was assumed to have uniform properties, and only the density, elastic modulus, and structural damping coefficient were allowed to vary during the tuning process. Using 24 frequencies for the tuning procedure more than sufficient to produce an R matrix of rank 3. However, the solution failed to converge. It is suspected that the test procedure for such a lightly damped structure introduces enough phase error to cause numerical problems when structural damping parameters are included. In addition, since structural damping and stiffness are not independent, care must be taken to use an appropriate parameter update scheme when including them simultaneously.

Figure 5 shows the iteration history with no damping. When only two parameters (elastic modulus and density) were considered, the procedure essentially converged in just two iterations. The large magnitude of the parameter changes suggested a possible error in the acquisition of the test FRF's, which subsequently proved to be the case. The close match between the test results and the converged analytical solution for the drive point location is shown in Figure 6.

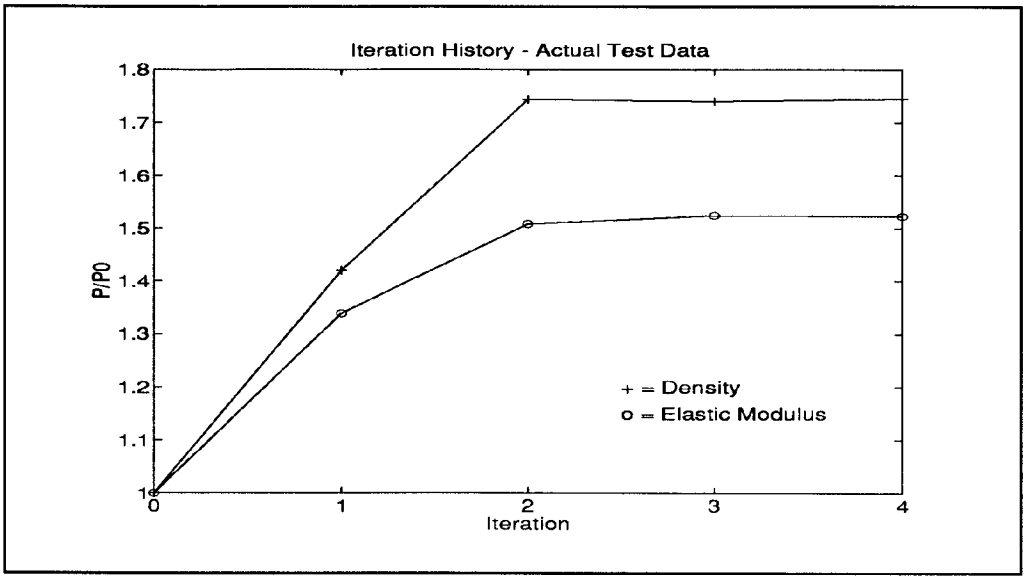

Figure 5 Prismatic Bar - Actual Test Data - Iteration History

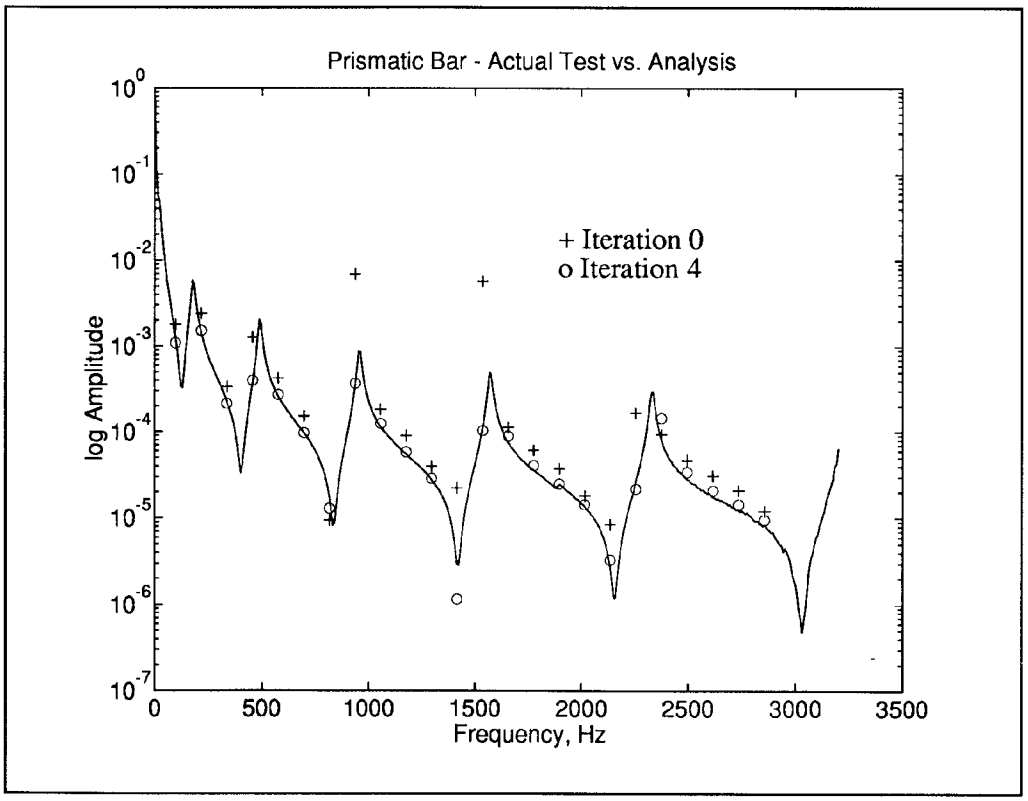

Figure 6 Prismatic Bar - Actual Test vs. Iteration 0 and Iteration 6

Conclusions

The MSC/NASTRAN Version 67 procedure described herein shows promise for tuning finite element models to match test FRF data. However, much work has yet to be done to determine its suitability for use with complex structures encountered regularly in industry. Questions remain regarding criteria for convergence and requirements for suitable test data acquisition. These are subjects of ongoing research at The Boeing Company.

Acknowledgments

The authors wish to express their appreciation to Dick Martin, John White and others in the Propulsion Research Unit of the Boeing Commercial Airplane Group for funding development of the FRF tuning capability in MSC/NASTRAN and their ongoing technical direction and encouragement. We would also like to thank Mladen Chargin and Dr. Hiro Miura (NASA-Ames) for stimulating technical discussion on tuning methods, and Prof. David Ewins (Imperial College, UK) for introducing us to his method and for his ongoing consultation.

References:

[1]Blakely, K.D., "Refining MSC/NASTRAN Models to Match Test Data," *MSC/-WORLD*, Vol. 1 No. 2, December, 1991.

[2]Blakely, K.D., and Dobbs, M.W., "Modification and Refinement of Large Dynamic Structural Models: Efficient Algorithms and Computer Simulations," Proceedings of the First International Modal Analysis Conference, Orlando, Florida, November, 1982.

[3]Blakely, K.D., and Walton, W.B., "Selection of Measurement and Parameter Uncertainties for Finite Element Model Revision," Proceedings of the Second International Modal Analysis Conference, Orlando, Florida, February, 1984.

[4]Conti, P., and Donley, M., "Test/Analysis Correlation Using Frequency Response Functions," Proceedings of the Tenth_International Modal Analysis Conference, San Diego, California, 1992.

[5]Flanigan, C. C., "Test/Analysis Correlation Using Design Sensitivity and Optimization," SAE Technical Paper No. 871743, Aerospace Technology Conference and Exposition, Long Beach, California, October, 1987.

[6]Imregun, M., and Visser, W.J., "A Review of Model Updating Techniques," *Shock and Vibration Digest*, Vol 23, No. 1, Sept., 1990.

[7]Lin, R.M., and Ewins, D.J., "Model Updating Using FRF Data", Proceedings of the 15th International Seminar on Modal Analysis, K.U. Leuven, September, 1990.

[8]*MSC/NASTRAN Design Sensitivity and Optimization User's Guide, Version 67,* The MacNeal Schwendler Corporation, Los Angeles, CA, 1992.

[9]*MSC/NASTRAN Programmer's Manual, Version 63,* The MacNeal Schwendler Corporation, Los Angeles, CA, October 1983.

[10]*MSC/NASTRAN User's Manual*, Version 67, The MacNeal Schwendler Corporation, Los Angeles, CA, August 1991.

[11]Miura, H. and Chargin, M.K., "Applications of Structural Optimization Methods to System Parameter Identification," Paper presented at the Third Air Force/NASA Symposium on Recent Advances in Multidisciplinary Analysis and Optimization, San Francisco, California, September, 1990.

[12]Visser, W.J., and Imregun, M., "A Technique to Update Finite Element Models Using Frequency Response Data", Proceedings of the 9th International Modal Analysis Conference, Florence, Italy, 1991.