The Contribution of Passenger Safety Measures to the Structural Performance in Sports Racing Cars

By

Mark Roots, Jason Brown, Neill Anderson, Thomas Wanke and Marco Gadola
Cranfield University, Cranfield, BEDS., U.K.

Abstract

This report deals with the modelling of an Automotive Chassis using MSC/NASTRAN. The torsion stiffness of the chassis was able to be increased by 500 % over the initial configuration by judicious design.

In an effort to allocate more science to the problem of roll cage design it was proposed that non-linear finite element analysis using MSC/NASTRAN would give a good indication of the true load carrying capacity and deflection under load of the roll cage/frame. The analysis carried out was verified by the test programme on a full scale chassis.This analysis gave results within an acceptable 10 % of the test results despite the simplifying assumptions.

This application of MSC/NASTRAN is new as most small automotive manufacturers rely on past experience for their development. This works well for evolutionary design but not for major structural modifications as were carried out. This report higlights the value of MSC/NASTRAN in this application.

Introduction

TVR Engineering is one of a handful of small automotive manufacturing companies in the United Kingdom. They specialise in the production of high performance vehicles for enthusiasts and their cars are aimed at this niche market.

MSC/NASTRAN was used to in the development of a TVR chassis specifically for racing. For racing a significant improvement in the chassis torsion stiffness was required. In order to comply with the racing regulations a full roll cage had to be fitted and this provided the ideal method for improving the torsion stiffness. The race regulations specify loading requirements for the roll structure and the material nolinearity capability of MSC/NASTRAN was used to determine the collapse load for the structure. The analytical results were verified by tests on the chassis developed.

The incorporation of the roll cage into the basic chassis enable the torsion stiffness to be increased by 500 % through careful design and extensive analysis. In addition a method for verifying the load carrying capability of the roll structure using MSC/NASTRAN was developed.

Chassis Arrangement

The TVR chassis has the same basic structural form for all the variants based on the well established backbone chassis to which the body work is attached. The TVR vehicle body work is produced using glass reinforced polymers[1]. The major components and features of the chassis are described below and illustrated in Figure 0.1.

- triangulated front cage accommodating the radiator and wide based front double wishbones,
- large engine bay for the newly developed TVR engine. The engine bay tapers at the rear to the footwell,
- transmission tunnel designed as a tubular truss,
- a steel plate bolted underneath the transmission tunnel in order to protect the driveline and exhaust and most importantly to enclose the open section,
- triangulated rear cage accommodating the rear differential and the rear double wishbone suspension,
- outriggers which run underneath the occupant floor. These provide attachment for the GRP body sills and have the added advantage of providing some side impact protection to the occupants,
- outrigger stiffeners are attached at the front and rear and provide stiffness to these outriggers.

The backbone chassis works by having a central component of the structure taking the torsion loads from the front and rear of the vehicle. In the case of the TVR chassis, the backbone is built up from a well triangulated truss arrangement in the transmission tunnel.

The advantage of the backbone frame chassis is the relatively high torsion stiffness at low cost and low weight. The disadvantage is the length of the outriggers needed to carry the body sides.

[1] Glass Reinforced Polymer (GRP) is often called Fibreglass.

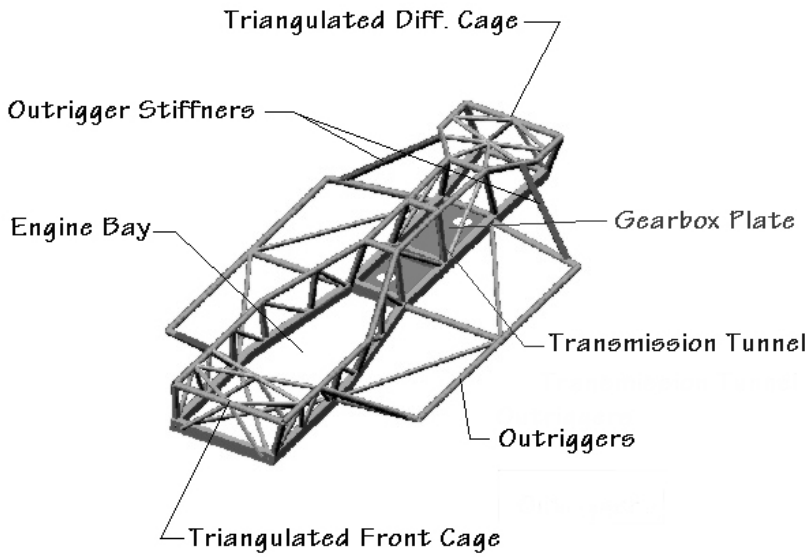

Figure 0.1: TVR Chassis Arrangement

As a general rule the value of the torsion stiffness is taken as a measure of the structural performance of the chassis. A high torsion stiffness is important for handling and ensures that the tyres remain in contact with the road, that the car feels good to the driver and that the car reacts in a predictable and controlled manner. Practical experience has shown that the higher the stiffness of the car the better these handling characteristics will be.

In today's climate a torsion stiffness of between 6,000 and 9,000 Nm/deg is considered adequate for a general purpose road car. Larger and more expensive cars (e.g. Mercedes or BMW) have significantly higher values of torsion stiffness (i.e. 12,000 - 15,000 Nm/deg) for better refinement.

Racing demands even higher levels of torsion stiffness which is critical for maintenance of the correct suspension geometry at high speed. The highest torsions stiffness is found in Formula 1 vehicles which have torsion stiffnesses in excess of 35,000 Nm/deg.

The achievement of a satisfactory torsion stiffness requires a closed box structure to carry the torsion load in shear within the panels.

Modelling Assumptions

It was considered to be sufficiently accurate to use MSC/NASTRAN BAR and BEAM elements to model the spaceframe. In addition the plate (where used) was modelled using thin isoparametric shell elements (QUAD4). A typical MSC/NASTRAN model can be found in Figure 0.2.

A number of simplifying assumptions were made for the modelling. These included:

- all welded joints were modelled as rigid in all degrees of freedom,
- multiple joints (of which there are many) all intersected at the neutral axis and small offsets were ignored between bars of differing sections,

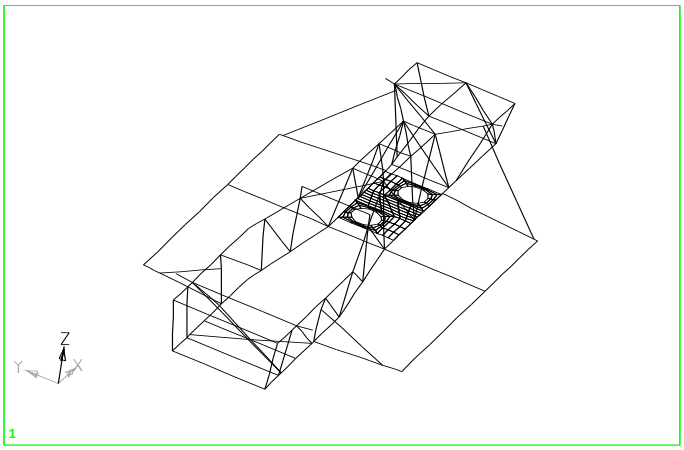

Figure 0.2: MSC/NASTRAN Model - Standard TVR Chassis

- initially the bend radii were modelled in a crude way (in the roll cage rear hoops) these were neglected in subsequent models,
- material properties were not modified to make allowance for welding and fabrication and minimum published strength values were used for the plastic analysis.

It was expected that these assumptions would result in a stiffer torsion model than was realised in the tests. This was found to be true in all cases - the reader is referred to references [4] and [5].

Model Weights

To determine the weight of the various chassis models a '1g' gravity load was applied in a separate analysis subcase. The material densities were specified in the material input (MAT1) data and the gravity load was specified using the GRAV input card which defines the acceleration vector and its magnitude.

MSC/NASTRAN distributes the mass along the element neutral axis. The resulting forces at the model restraints were retrieved from the analysis data to give an approximation of the chassis mass. This data was then used in estimating the weight efficiency of the torsion structure.

Modelling of the Restraints for the Torsion Tests

It was necessary to restrain the chassis and only remove the rigid body modes of motion. Hence, a statically determinant restraint system was required to ensure that an 'overstiff' structure wasn't produced. The system of restraints is shown in Figure 0.3. Restraint 123 restrains the three translations, restraint 23 restrains the rotations about 3 and 2 respectively, the restraint 2 provides the final rotational restraint about 1. The remaining suspension mount at the front of the chassis was used to apply the torsion load.

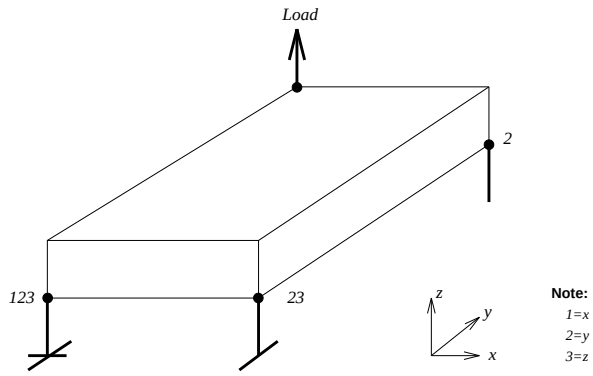

Figure 0.3: Chassis Restraints

Torsion Analysis and Testing

Gadola [4] investigated the torsion stiffness of the TVR Griffith Chassis and bodywork. The analysis was carried out using the CRASHD software[2] and the theoretical results were compared with a series of tosion tests on the structure. These included:

(a) Chassis without either the gearbox mounting plate or body.
(b) Chassis with the gearbox mounting plate but no body.
(c) GRP Body alone
(d) Chassis with the gearbox plate and GRP body work.

A summary of the results from this investigation are contained in Table 0.1.

A similar chassis model was then analysed using MSC/NASTRAN (see Table 0.1). These results formed the basis of the ensuing investigation into the increase of the torsion stiffness.

TVR Engineering produce an after market rear roll-hoop for fitment to both the Griffith and Chimaera. This roll hoop was taken as the basis of the roll cage design and developments were added to this to improve the structure. The progression of the modelling was:

- Chassis with the standard roll hoop fitted but with ideal joints, Figure 0.4
- Chassis with a simple full roll cage - front and rear hoops tied together longitudinally and attached to the rear differential cage, Figure 0.5
- Chassis with a full roll cage attached at the front and rear ends and incorporating a side impact bar, Figure 0.6.

In addition to modifing the chassis arrangement a number of different materials and cross sections were analysed. This investigation showed that a 35 % increase in torsion stiffness could be realised with the addition of a simple full roll cage.

Wanke [5] continued this investigation for a chassis specifically for racing. The design was thus not restricted by normal road use constraints (e.g. large doors). The racing requirements for a full roll

[2]CRASHD is a large deformation code written by Cranfield Impact Centre which is used within Cranfield University.

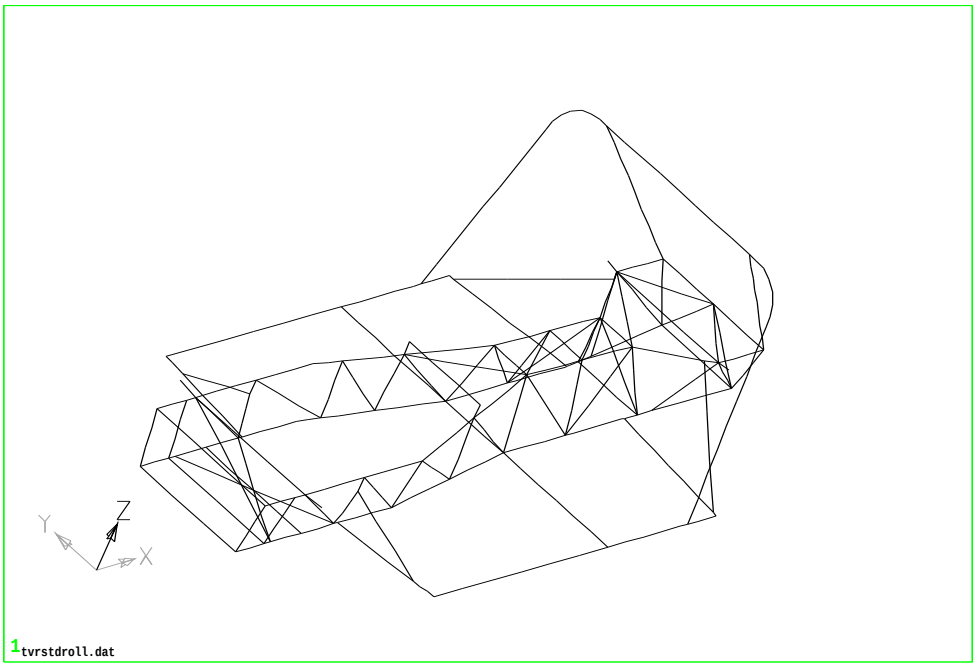

Figure 0.4: MSC/NASTRAN Chassis with Standard (After Market) Roll Hoop

cage provided the ideal tool to improve the torsion stiffness. The ease of modification of the models within MSC/NASTRAN aided in the many analyses required during the chassis development.

Table 0.1 summarises the results from the analyses and the physical tests carried out. It was found that as the chassis was further triangulated the torsion stiffness was increase as would be expected. Of particular importance to the achievement of the vast improvement in torsion stiffness were two areas - the triangulation of the floor pan and the routing of the high loads from the flexible open section at the front of the chassis into the roll cage structure. Careful design in these regions led to an increase of over 500 % in the torsion stiffness. It was found that the roll structure resulted in a good shear box arrangement and the gearbox plate, which was very important in the simple chassis (contributing 50 % of the overall torsion stiffness) became almost redundant in the final chassis (contributing less than 1 % of the overall torsion stiffness).

A good correlation was found between the MSC/NASTRAN analysis and the test of the chassis of the same configuration. The difference in torsion stiffness was only 10 % with the finite element model yielding a stiffer solution (as expected due to the joint modelling). The results for the final torsion model are given in Table 0.1. This was the model used for the subsequent nonlinear analysis.

Non-Linear Analysis of Roll Structure

The torsion analysis model was converted to run using the nonlinear modelling capability of MSC/NASTRAN and this incorporated material nonlinearity and made allowances for large displacements.

The NLPARM card was used to control the analysis subcases, the solution sequence and divergence of the solution. The load was applied as displacement increments and the structure was restrained to model the physical tests.

The load carrying capacity of the roll cage is specified by the RACMSA and FIA for racing roll cage approval and this consisted of:

$1.5w$ Laterally
$5.5w$ Longitudinally
$7.5w$ Vertically

(Where w is the weight of the vehicle plus 75 kg.)

The RACMSA stipulate that this load must be able to be carried at *any* point on the top of the roll cage. From the investigation of different loading cases it would appear that the load applied to the front windscreen corner is the worst case. This was the load point used for this analysis.

The application of the oblique displacement load presented its own problems. MSC/NASTRAN needs to have the displacement load applied in the Basic Co-ordinate System. In order to apply the oblique loading a long BAR element was positioned in three dimensions to lie on the load line required. By incrementing the lower end of this bar it was possible to maintain the correct load path even if small errors in the dislacements occured. This proved to be a successful method of applying the load and the load applied was given by the axial load in the BAR element.

Both fully and partially nonlinear analyses were run and compared. The partially nonlinear models were found to be much more efficient in analysis time. Fully nonlinear models took between 5 and 7 hours to run on the Cray YMP computer. This could be reduced to between 1 and 4 hours when run as partially nonlinear. The following MSC/NASTRAN analyses were selected as being representative of the structural variations.

- Model consiting entirely of BEAM elements thus representing a fully nonlinear model of the chassis.
- Model consiting of both BEAM and BAR elements thus representing a partially non-linear model of the chassis.

Using a linear model to predict the collapse load of the nonlinear structure yields, as expected, quite erroneous results. A linear model using the same load subcases estimates applied loads which are much higher than the nonlinear models.

The analysis results were verified by a physical test and the test setup is shown in Figure 0.13. The test rig was designed based on the loads predicted from MSC/NASTRAN.

As the load was applied the deflection increased on the front loaded corner and the collapse began at the loaded corner. The first hinge to form was on on the front 'A' Pillar on the lower end of the Gusset. As teh load steadily increased a number of other hinges formed in the members of the roll cage. The test was terminated when the limit of travel of the LVDT was reached.

In all the preliminary models the gussets which were fitted to the test chassis were left out of the analysis. To check their influence, however, a model was run with the gussets as used in the test and the results are presented in Table 0.2.

It was apparent that local collapse (buckling) was the main failure mechanism in this instance. Whilst local buckling is not accounted for with the nonlinear analysis in MSC/NASTRAN reasonable results were obtained. The collapse load measured in the test was 20 kN and the deflection at this load was 18 mm. Once the plastic hinges began to form the load carried dropped to around 20 kN with a deflection of 60 mm. These results compared well to the MSC/NASTRAN values given in Table **??**.

Discussion

MSC/NASTRAN provided an ideal tool for this development work. A small automotive manufacturer would find the cost of testing many chassis' uneconomical. Finite Element Analysis was shown to be a much more efficient method of carrying out this type of development work.

Judicious design and development aimed at generating a closed box structure to carry the torsion load resulted in a 500 % increase in torsion stiffness over the original chassis. In addition the MSC/NASTRAN analysis was verified by testing which gave results within and acceptable 10 % error band.

The torsion model was then able to be modified to investigate the structural collapse of the roll cage. This method of analysis was time consuming but would still represent the most economical solution for a small company. It is possible to carry out many analyses for the same sum of money required for one full scale test.

MSC/NASTRAN was found to model the collapse mechanism closely despite the many simplifying assumptions made. The collapse load was found to be within 10 % of the analysis results.

Conclusions

This work highlights an application of MSC/NASTRAN to a real life problem. Traditionally automotoive manufacturers of this siase would rely on their experience for the design and development of chassis. This process is well suited to evolutionary changes but not to major modifications as were carried out in this instance. Finite Element Analysis is ideally suited to this type of development and the results confirm its suitability.

The application of Finite Element Analysis to this problem is new. The use of material nonlinear analysis was found to be of great benefit to the end user when deciding what material to use for the roll structure. MSC/NASTRAN dealt with this complex problem well and whilst time consuming to analyse this still represents an efficient method of development.

In all cases the results from MSC/NASTRAN compared well to the test values. This is true for both the linear and nonlinear analyses and thus provides a valuable design tool for this class of structural development problem.

Bibliography

[1] Baker, J. & Heyman, J. *Plastic Design of Frames Part 1 - Fundamentals*, Cambridge University Press, 1969.

[2] Boresi, A.P.; Schmidt, R.J.; Sidebottom, O.M. *Advanced Mechanics of Materials - 5th edition* , John Wiley and Sons, 1993.

[3] Buchanan, G.R. *Mechanics of Materials* , Holt Rinehard and Winston Inc., 1988.

[4] Gadola, M. *Sports Racing Car Torsion Stiffness* MSc Thesis, Cranfield Institute of Technology, 1992.

[5] Wanke, T.R. *Finite Element Analysis of the Torsional Stiffness of a Sports Racing Car Chassis*, MSc Thesis, Cranfield University, 1994.

[6] Pawlowski, J. *Vehicle Body Engineering*, Business Books Ltd., London, 1969

[7] *MSC/NASTRAN Non-Linear Analysis Handbook*, MacNeal Schwendler Corporation.

[8] *MSC/NASTRAN Linear Analysis Handbook* , MacNeal Schwendler Corporation.

TVR Chassis Analysis and Test - CRASHD				
Chassis Configuration	Theory Nm/deg	Test Nm/deg	Weight kg	Efficiency (Nm/deg)/kg
Chassis without gearbox plate	1,222	1,182	73.5	16.1
Chassis + gearbox plate	2,651	2,508	75	33.5
GRP Bodywork	-	373.5	107.5	3.47
Chassis + bodywork + plate	3,584	-	182.4kg	19.65
TVR Chassis Analysis - MSC/NASTRAN				
Chassis without gearbox plate	1,320	-	71	18.6
Chassis + gearbox plate	2,676	-	74	36.2
Chassis with Roll Structure				
Chassis Configuration	Deflection at load mm	Torsion Stiffness Nm/deg	Weight kg	Efficiency (Nm/deg)/kg
1.No gearbox plate + rear roll hoop	13.41	1877.5	70.7	26.6
2. No gearbox plate + front and rear hoops	10.88	2312.2	80.4	28.8
3. Gerabox Plate + front and rear hoops	7.68	3275.6	81.9	40.0
Longer Chassis with Full Roll Cage				
Chassis with full roll cage - tubular base	9.13	2752.4	87.9	31.3
Chassis with full roll cage - rectangular base	7.82	3216.9	96.4	33.37
MSC/NASTRAN and Test Results - Race Chassis				
Chassis Configuration	Theory Nm/deg	Test Nm/deg	Weight kg	Efficiency (Nm/deg)/kg
Chassis without gearbox plate	1,478	-	71	20.8
Chassis with gearbox plate	2,935	-	74	39.7
Chassis + standard rollcage (no plate)	4,290	-	112	38.3
Chassis + standard rollcage + plate	5,715	-	115	49.7
Chassis + initial racing rollcage	6,811	-	123	55.4
Chassis + racing rollcage (shear floor)	15,896	-	134	118.6
Chassis + racing rollcage + plate	16,278	-	137	118.8
Chassis + racing rollcage (test)	9,548	8,772	121	79
Final Model	9,947	-	108	92.1

Table 0.1: Summary of Results - Standard Chassis

Nonlinear Results Table					
Model Arrangement (Material Characteristic)	Max. Load (N)	Deflections (mm)			
		x	y	z	Total
Linear	37,497	-2.23	-13.45	9.85	16.82
Full Nonlinear	19,162	-2.79	-19.75	13.92	24.32
Full Nonlinear (T45)	45,857	-6.29	-58.70	36.84	69.59
Part Nonlinear	20,155	-2.36	-16.00	10.71	19.40
Nonlinear Model - Nonlinear Gussets (2 materials)	19,380	-2.64	-22.96	11.53	25.83

Table 0.2: Cerbera GT Nonlinear Crush Results

Figure 5: MSC/NASTRAN Chassis with Front and Rear Roll Hoops

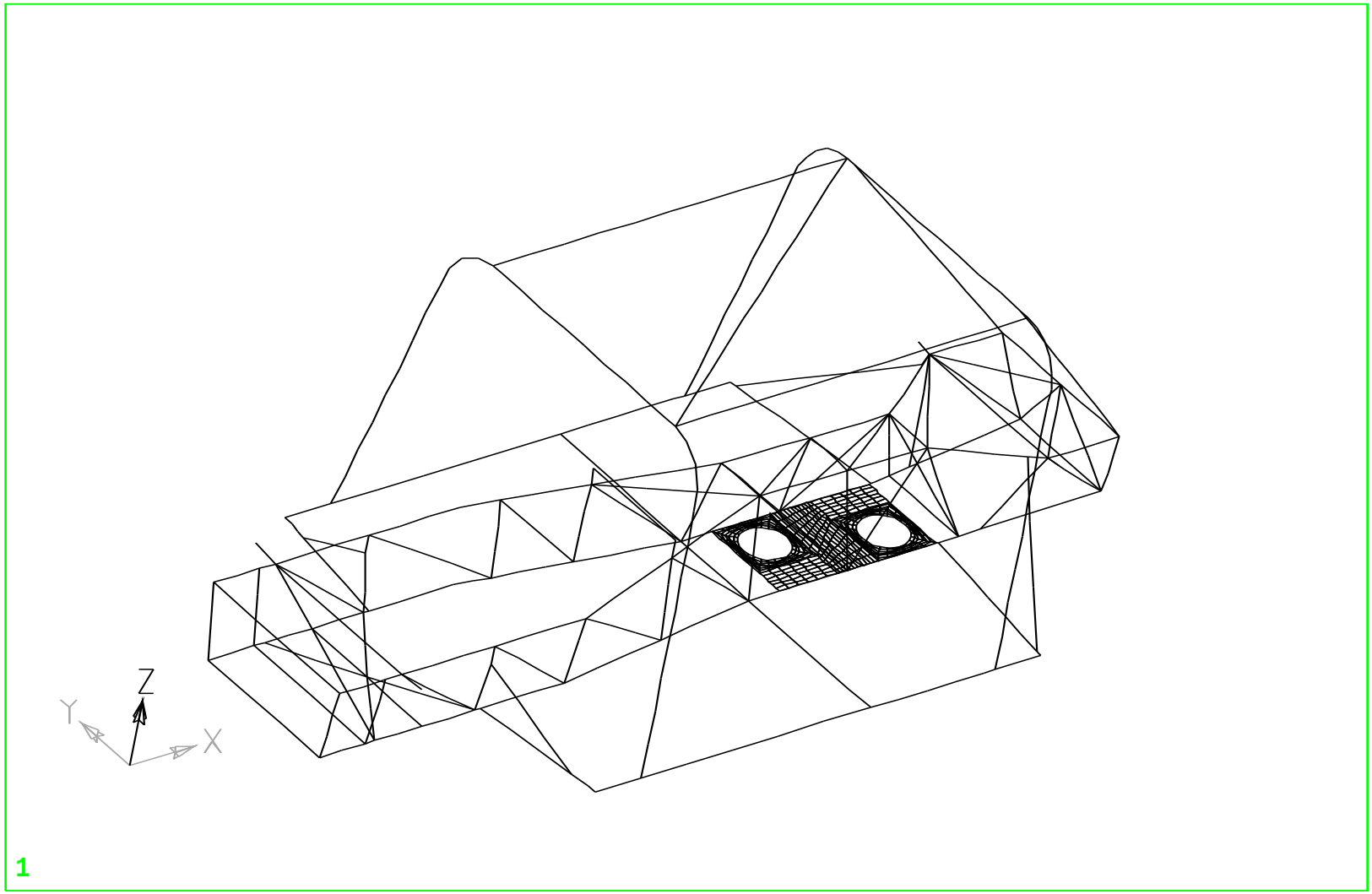

Figure 6: Extralong Chassis with Full Roll Cage

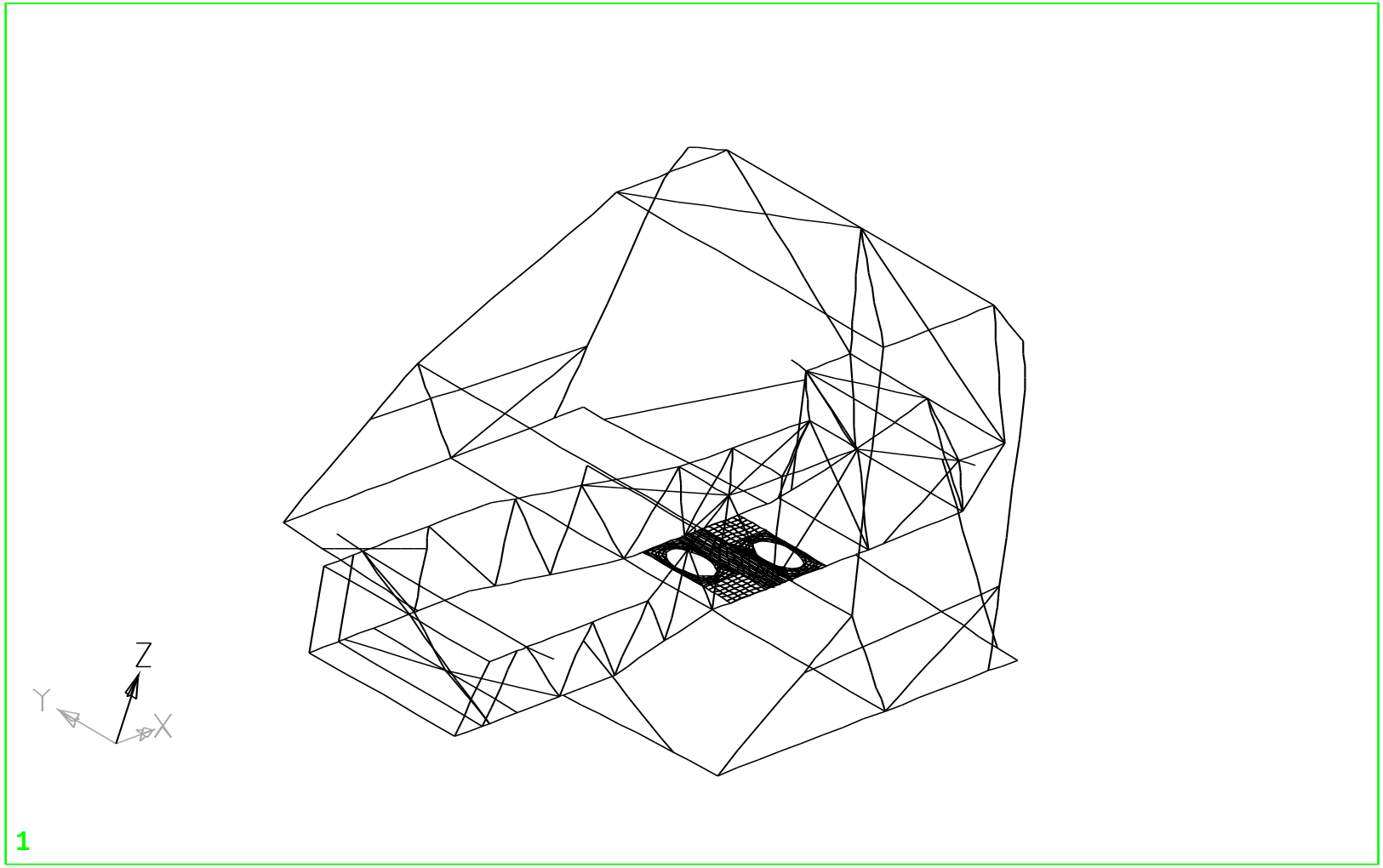

Figure 7: Cerebra GT Chassis Final Model

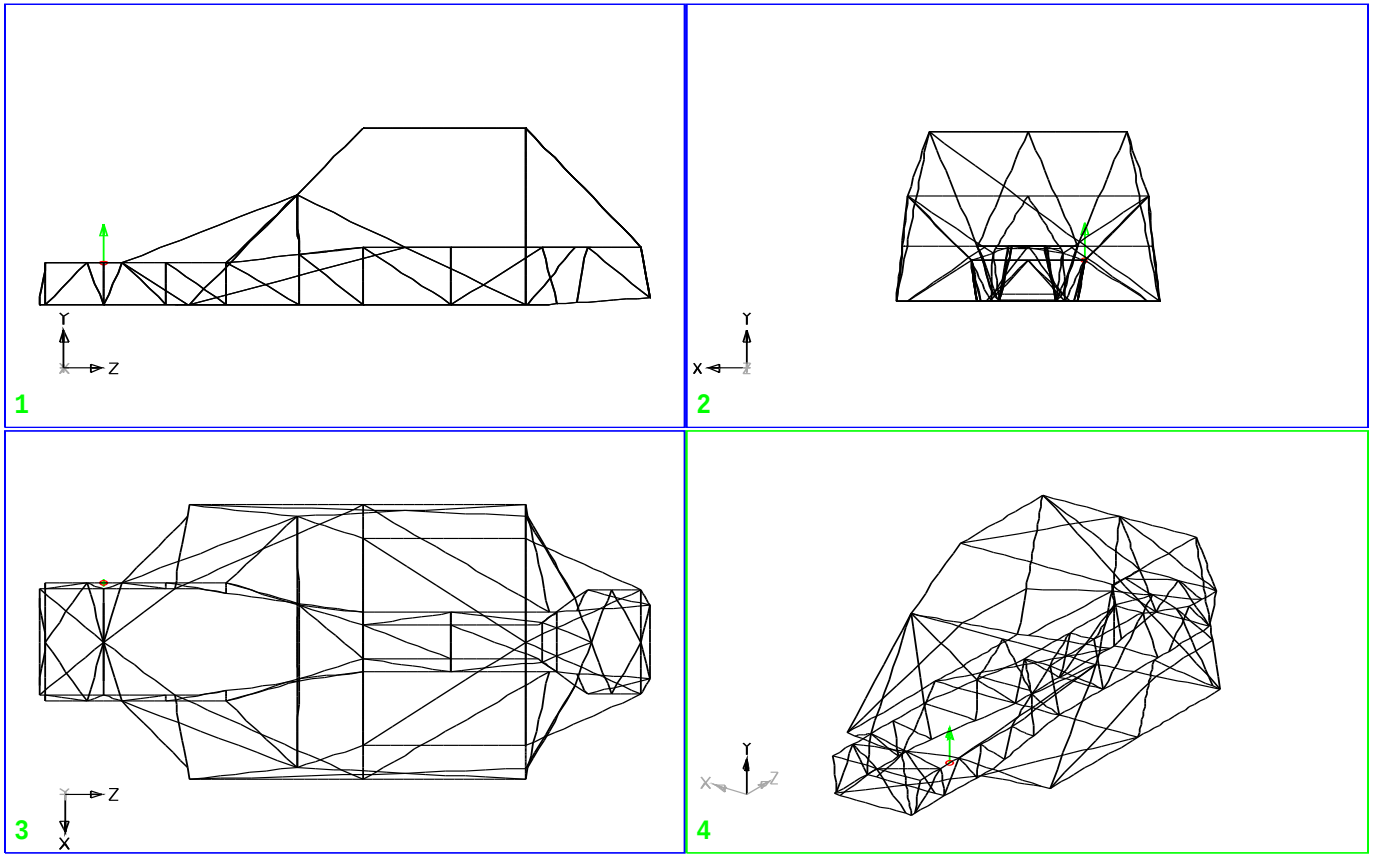

Figure 8: Stress Distribution in the Fully Nonlinear Model at Failure Case

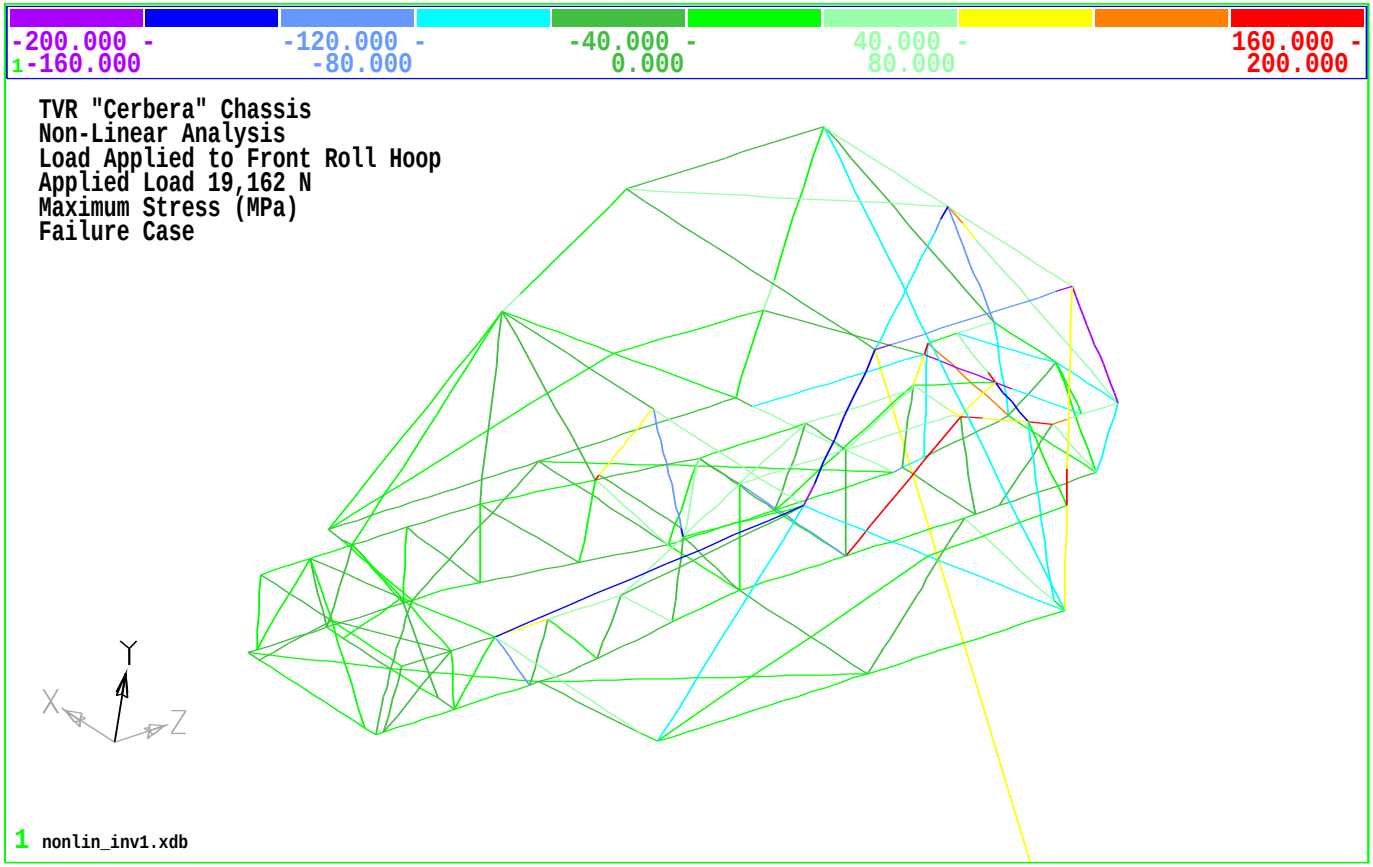

Figure 9: Stress Distribution in the Partially Nonlinear Analysis Model

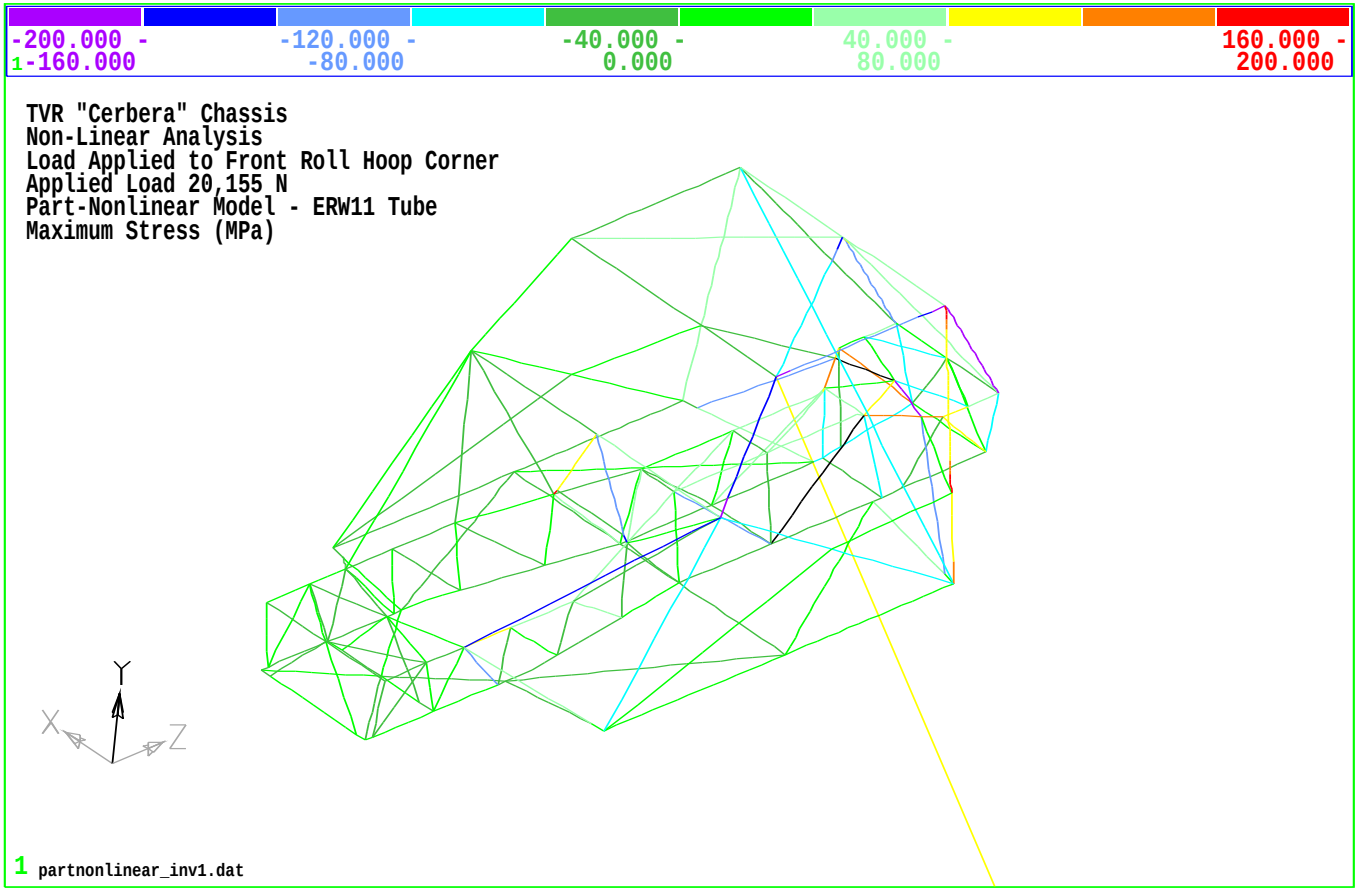

Figure 10: Load Displacement Curve for Fully Nonlinear Model

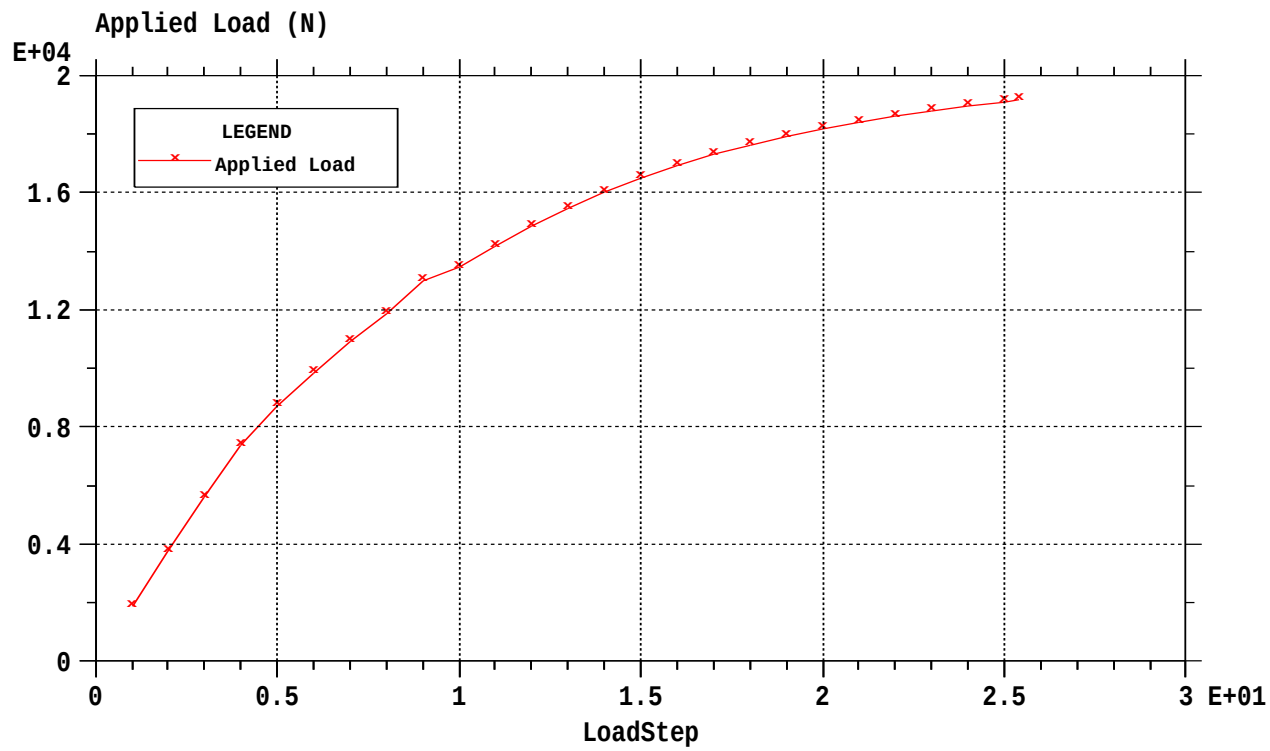

10

Figure 11: Load Displacement Curve for Partially Nonlinear Model

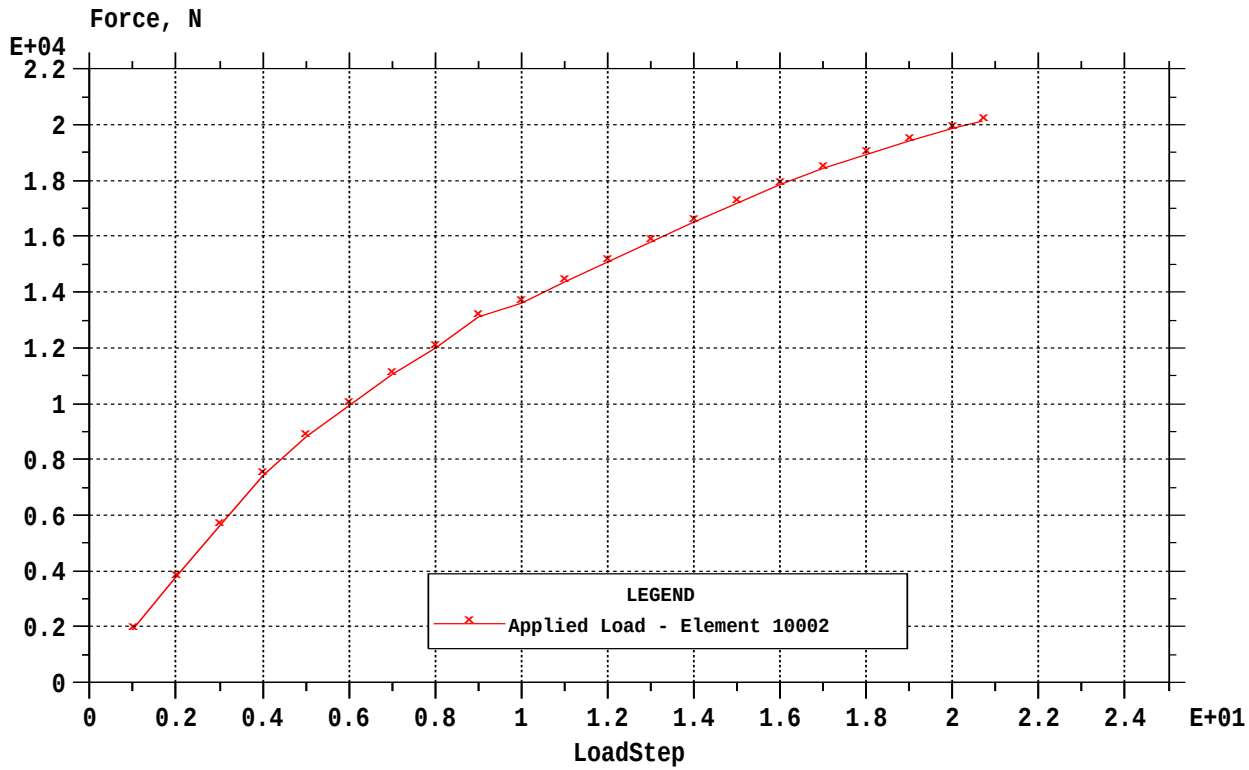

6

Figure 12: Stress Distribution in the Fully Nonlinear Analysis Model with the Webs Included - Both Materials Modelled

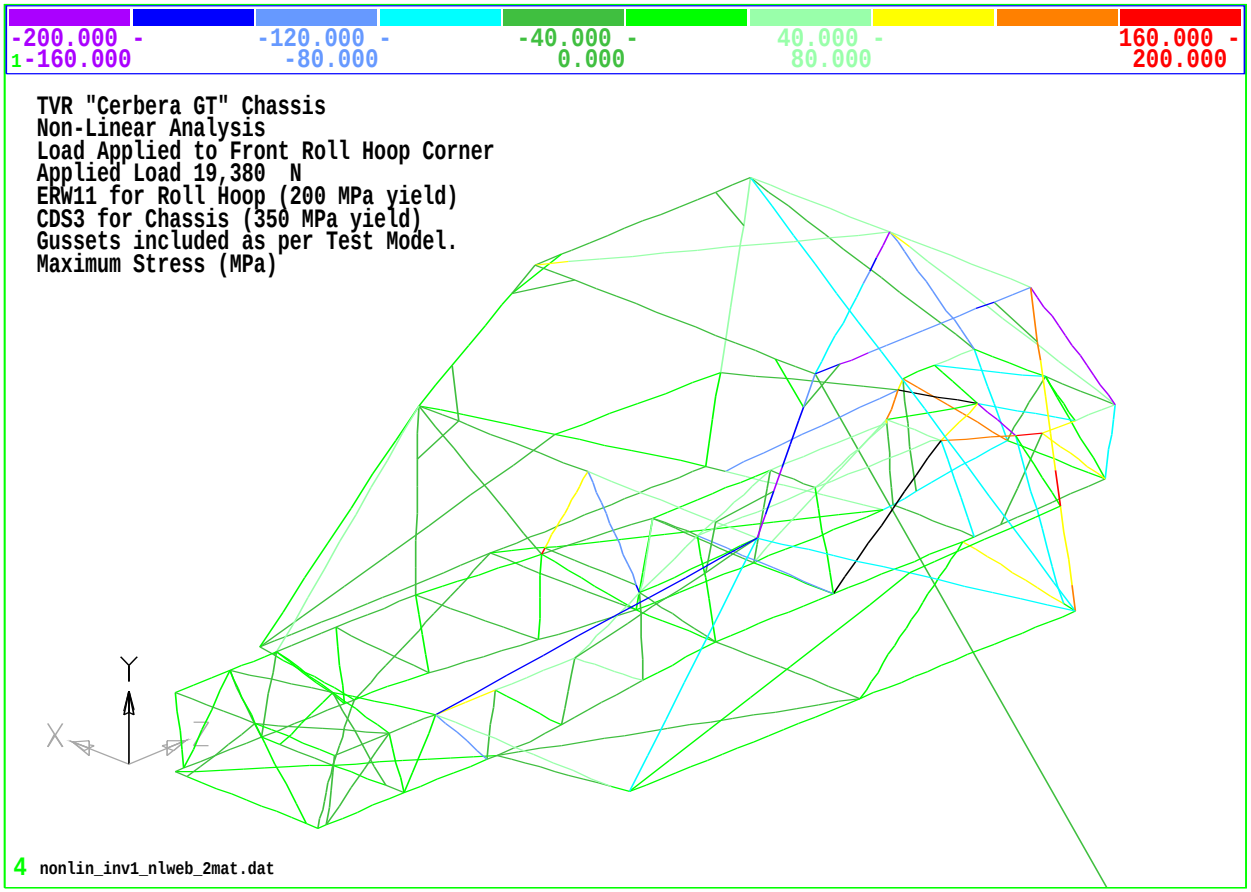

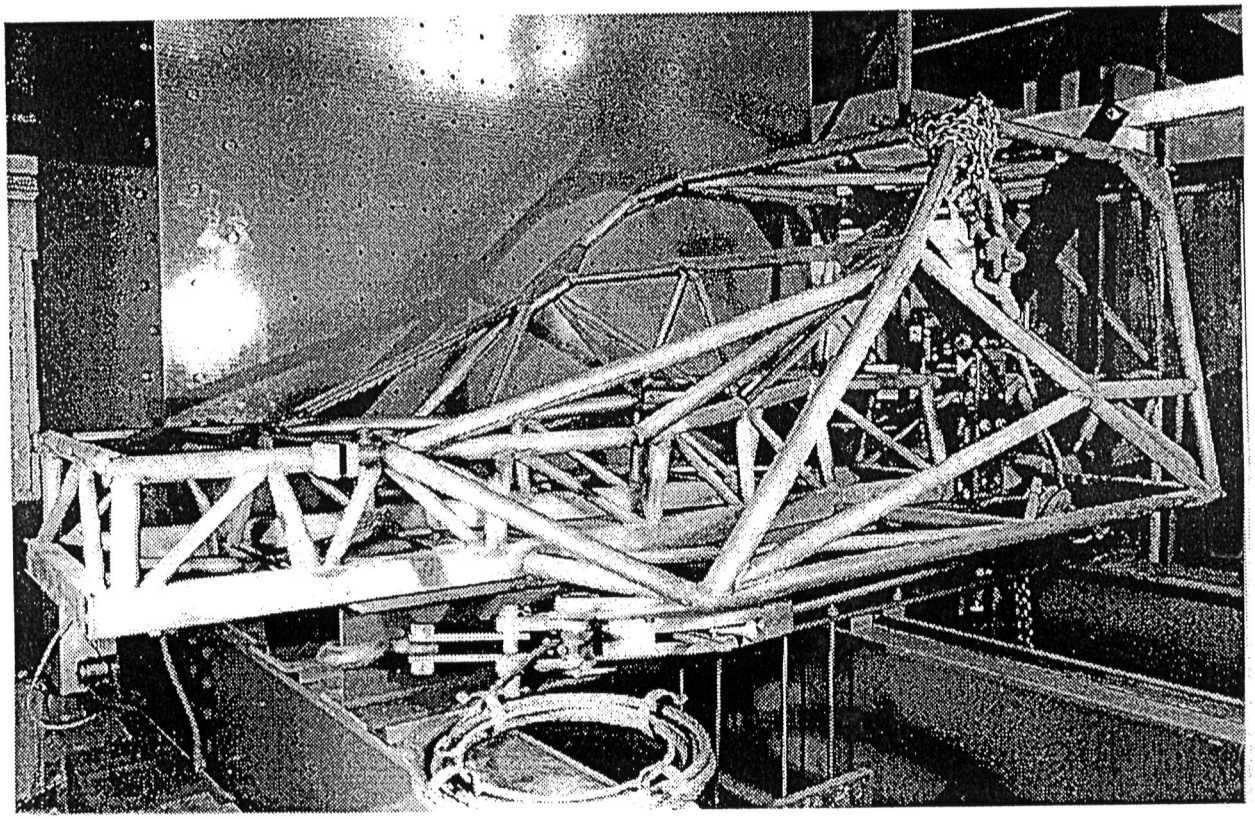

Figure 0.13: Test Rig Setup for the Load Test